ADAMS HILL CENTER

25 AUGUST 2015

OWNER
SJMJ LLC
1118 E. 70th Avenue
Anchorage, Ak 99518
907 433-1323
smadams@subwayak.com

ARCHITECT
Gordon Thompson Architect
711 M Street
Anchorage, Ak 99501
907 279-2554
907 360-0795 cell
gordot@gci.net

CIVIL ENGINEER
Anderson Engineering
Dimond Center 800 E Dimond
Suite 3-305
Anchorage, Ak 99515
907 522-7773
andengr@gci.net

STRUCTURAL ENGINEER
Franklin and Associates
225 E. Fireweed Lane Suite 202
Anchorage, Ak 99503
907 277-1631
franklin@alaskan.com

MECHANICAL ENGINEER
RSA Engineering Inc.
670 W. Fireweed Lane Suite 200
Anchorage, Ak 99503
907 276-0521
bpekar@rsa-ak.com

ELECTRICAL ENGINEER
Northern Electrical Engineering Consulting, LLC
721 Sesame Street Suite 2B
Anchorage, Ak 99503
907 562-1552
jimparker@gci.net

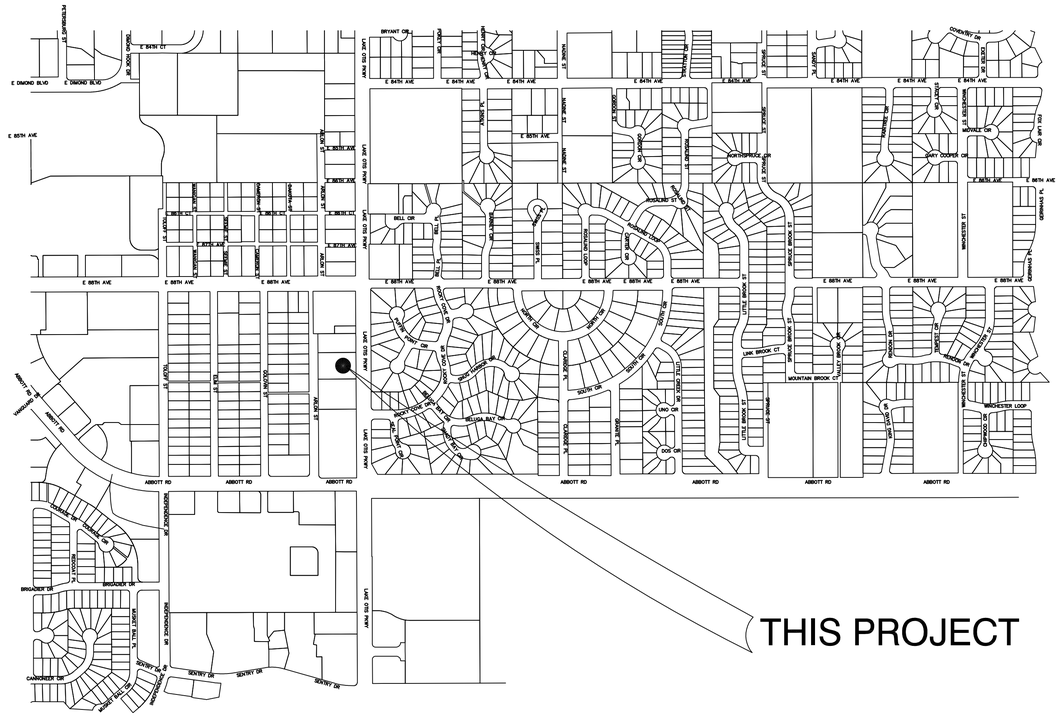

LOCATION MAP
1" = 500'

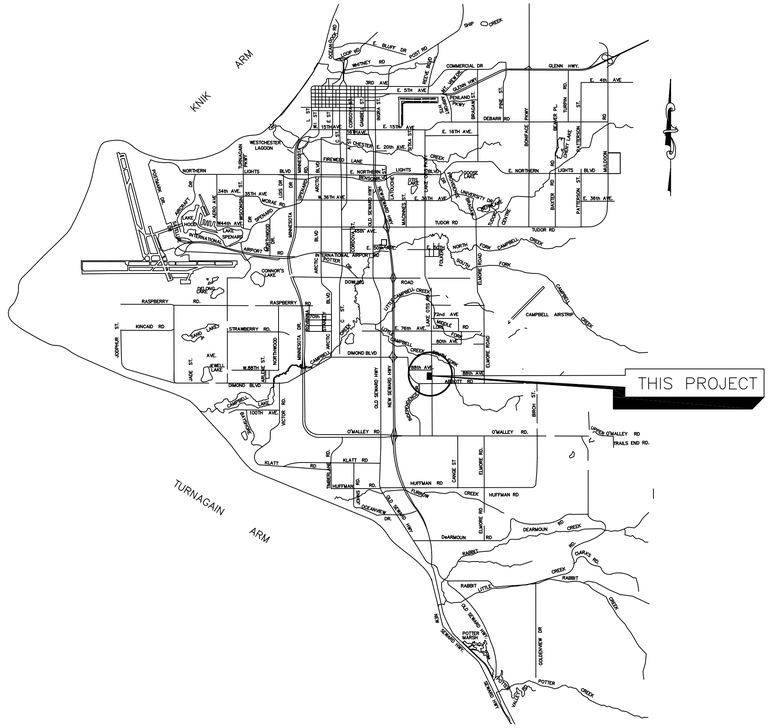

VICINITY MAP
NOT TO SCALE

ADAMS HILL CENTER
CHASE SUBDIVISION
BLOCK 2, LOT 2A-1
Anchorage, Alaska
CIVIL PLANS

ADDRESS: 8950 LAKE OTIS PARKWAY
GRID: SW2333

NOTES:

1. Construction Shall Be In Accordance With the Municipality of Anchorage Standard Specifications (MASS), Most Recent Edition.

2. The Contractor Shall Notify All Area Utility Companies Prior to Commencement of Excavation.

3. Existing Organics And Non-Complying Soil Material Will Be Removed Before Backfill Placement. Ground Will Be Scarified To Provide Bond With New Fill.

4. Imported Backfill Must Be Type II And Placed In 12" Lifts And Compacted To 95% Of Maximum Theoretical Density. Maximum Slope Is 1V:2H. Maintain 2' Setback From Property Lines.

5. Backfill Will Not Contain Frozen Material, Organics, Or Rocks Greater Than 12".

6. All Disturbed Slopes Will Be Stabilized By Pavement Or Landscaping.

7. Surfaces Must Be Sloped Away From Building For 10': 2 % For Impervious Surfaces, 5% For Pervious.

8. Existing Storm Drain and Manholes Have Been Verified As Adequate In Condition And Capacity By Engineer.

9. Install 4" Insulation 2' Wide Over All 12" CPEP.

10. Anderson Engineering will Perform the Required Civil Engineer Inspections Per Section AMCR 21.90.003.E.2-4 Which Include Observation and Review of Line, Grade, and Surface Drainage.

11. Northern Geotechnical and Terra Firma Will Perform the Required Soils Engineer Inspections Per IBC Table 1704.7. Inspections Shall Include Observations During Grading and Testing For Required Compaction as Well as Observations During Preparation of The Natural Ground Prior to Fill Operations.

12. No Snow Storage Is Provided On the Site. All Accumulated Snow Will Be Hauled From The Site.

13. 4" HDPE Roof Drain Must Have A Minimum of 4' of Cover Or 4" Of Insulation And 3' of Cover.

HAUL ROUTES:

1. Fill Material will be Hauled From AS&G East onto Minnesota Drive, then Continue East on O'Malley Road, then Turn North Onto Lake Otis, To the Site. The Return Trip Will be the Reverse.

2. Waste Material Will Be Hauled South onto Lake Otis Parkway, then West onto Abbott Road, then continue West Onto Dimond Boulevard, then North onto Sand Lake Road, To Lucy Pit. The Return Trip will be the Reverse.

OWNER AND EMERGENCY INFORMATION:

STEVEN ADAMS
SJMJ LLC
1118 EAST 70TH AVE SUITE 200
ANCHORAGE, ALASKA 99517
PHONE: XXX-XXXX

SHEET INDEX

SHEET NO.	SUBJECT
C1	COVER SHEET
C2	SITE PLAN
C3	GRADING PLAN
C4	LAYOUT PLAN
C5	EROSION CONTROL PLAN
C6	SECTIONS 1
C7	SECTIONS 2
C8	DETAILS 1
C9	DETAILS 2
C10	LANDSCAPE PLAN
C11	LANDSCAPE DETAILS
SU1	AWWU SET: KEY MAP, NOTES, LEGEND, DETAILS, & ABBREVIATIONS
SU2	AWWU SET: SEWER AND WATER SERVICES PLAN & PROFILE

STATE OF ALASKA
49 TH
Michael E. Anderson
4381-E
4/11/2016.
REGISTERED PROFESSIONAL ENGINEER

ANDERSON ENGINEERING
800 E Dimond, Suite 3-540 | Anchorage, Alaska 99515
T 907.522.7773 | F 907.677.7766

CIVIL PLANS
ADAMS HILL CENTER
CHASE SUBDIVISION BLOCK 2, LOT 2A-1
8950 LAKE OTIS PARKWAY
Anchorage, Alaska

NO.	REVISION/ISSUE	DATE

DRAWN: MEA | CHECKED: MEA
DATE: 3/9/2016
PHASE: 100%
JOB NO.: -----
DRAWING TITLE: TITLE SHEET
SHEET NO.: C1

LEGEND

ROAD CENTERLINE
EASEMENT
PROPERTY/BOUNDARY LINE
SILT FENCE
DRAINAGE ARROW

EXISTING	NEW	
		SURVEY MONUMENT
TH 1A		TEST BORING OR PIT
OHE		OVERHEAD ELECTRIC
		POWER POLE W/ GUY ANCHOR
UGE		UNDERGROUND ELECTRIC
UT		UNDERGROUND TELEPHONE
U.T.		TELEPHONE PEDESTAL
G		GAS LINE
		EDGE OF TREES
204	132	ELEVATION CONTOUR
X175.8	X175.8	SPOT ELEVATION
		EDGE OF ASPHALT
		CURB & GUTTER
		SIDEWALK
		PAVEMENT
W	W	WATERLINE W/ VALVE
		FIRE HYDRANT
S	S	SEWERLINE W/ MANHOLE
		STORM DRAIN CLEANOUT
SD	SD	STORM DRAIN W/ MANHOLE
		STORM DRAIN CATCH BASIN MANHOLE
		CATCH BASIN
		CULVERT
		WATER SERVICE
		SEWER SERVICE
		STORM SERVICE
		GROUND WATER TABLE
		STORM DRAIN CLEANOUT

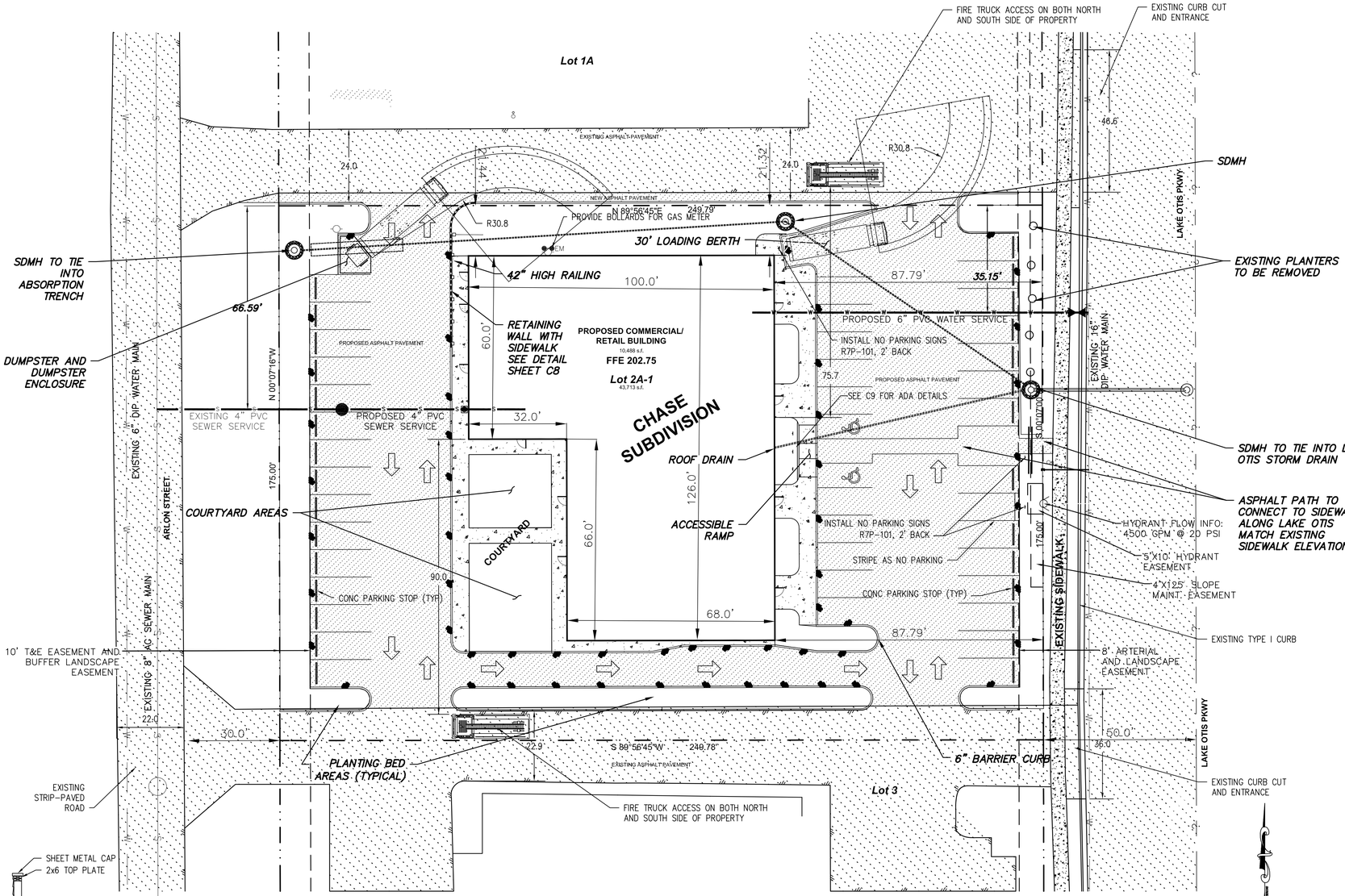

SITE PLAN
1" = 20'

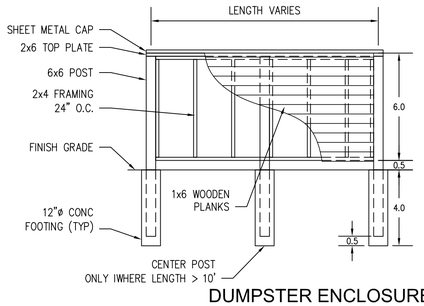

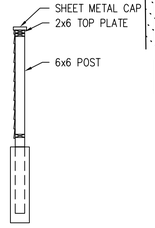

DUMPSTER ENCLOSURE
NTS

NOTES:
1. ALL WOOD SHALL BE TREATED.

NOTE: SURFACES MUST BE SLOPED AWAY FROM BUILDING FOR 10': 2 % FOR IMPERVIOUS, 5% FOR PERVIOUS.
ALL PARKING STRIPING SHALL BE WHITE PER MUTCD SECTION 3b.19

PARKING CALCULATIONS:

10,488 S.F. BUILDING AREA
41 SPACES AVAILABLE: 255 SF/SPOT

PARKING CALCULATIONS ARE DEPENDANT UPON TENANT IMPROVEMENTS AND WILL BE PROVIDED FOR REVIEW AT THAT TIME

STATE OF ALASKA
49 TH
Michael E. Anderson
4381-E
4/11/2016
REGISTERED PROFESSIONAL ENGINEER

ANDERSON ENGINEERING
800 E Dimond, Suite 3-540 — Anchorage, Alaska 99515
T 907.522.7773 — F 907.677.7766

SITE PLAN
ADAMS HILL CENTER
CHASE SUBDIVISION BLOCK 2, LOT 2A-1
8950 LAKE OTIS PARKWAY
Anchorage, Alaska

NO.	REVISION/ISSUE	DATE

DRAWN: MEA — CHECKED: MEA
DATE: 3/9/2016
PHASE: 100%
JOB NO.: -----
DRAWING TITLE: SITE PLAN
SHEET NO.: C2

LEGEND

EXISTING	NEW	
		ROAD CENTERLINE
		EASEMENT
		PROPERTY/BOUNDARY LINE
		SILT FENCE
		DRAINAGE ARROW
		SURVEY MONUMENT
TH 1A		TEST BORING OR PIT
OHE		OVERHEAD ELECTRIC
		POWER POLE W/ GUY ANCHOR
UGE		UNDERGROUND ELECTRIC
UT		UNDERGROUND TELEPHONE
U.T.		TELEPHONE PEDESTAL
G		GAS LINE
		EDGE OF TREES
204	132	ELEVATION CONTOUR
X175.8	X175.8	SPOT ELEVATION
		EDGE OF ASPHALT
		CURB & GUTTER
		SIDEWALK
		PAVEMENT
W	W	WATERLINE W/ VALVE
		FIRE HYDRANT
S	S	SEWERLINE W/ MANHOLE
		STORM DRAIN CLEANOUT
SD	SD	STORM DRAIN W/ MANHOLE
		STORM DRAIN CATCH BASIN MANHOLE
		CATCH BASIN
		CULVERT
		WATER SERVICE
		SEWER SERVICE
		STORM SERVICE
		GROUND WATER TABLE
		STORM DRAIN CLEANOUT

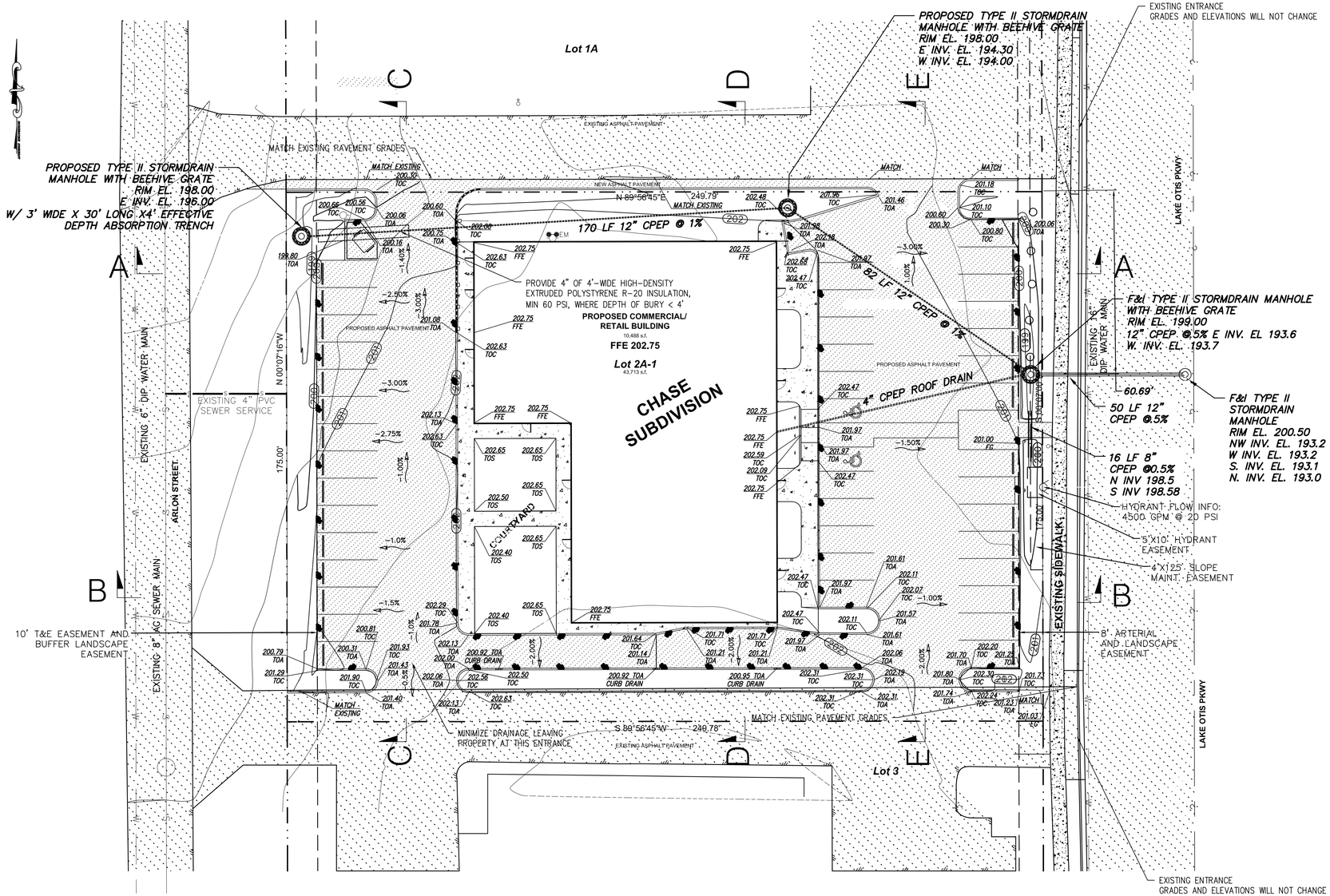

GRADING PLAN
1" = 20'

0 20' 40'
SCALE 1" = 20'

STATE OF ALASKA
49 TH
Michael E. Anderson
4381-E
5/3/2016
REGISTERED PROFESSIONAL ENGINEER

ANDERSON ENGINEERING
1399 W 34th Ave, Suite 203 Anchorage, Alaska 99503
T 907.522.7773 F 907.677.7766

GRADING PLAN
ADAMS HILL CENTER
CHASE SUBDIVISION BLOCK 2, LOT 2A-1
8950 LAKE OTIS PARKWAY
Anchorage, Alaska

NO.	REVISION/ISSUE	DATE

DRAWN: MEA CHECKED: MEA
DATE: 5/3/2016
PHASE: 100%
JOB NO.: -----
DRAWING TITLE: GRADING PLAN
SHEET NO.: C3

LEGEND

ROAD CENTERLINE
EASEMENT
PROPERTY/BOUNDARY LINE
SILT FENCE
DRAINAGE ARROW

EXISTING	NEW	
		SURVEY MONUMENT
TH 1A		TEST BORING OR PIT
OHE		OVERHEAD ELECTRIC
		POWER POLE W/ GUY ANCHOR
UGE		UNDERGROUND ELECTRIC
UT		UNDERGROUND TELEPHONE
U.T.		TELEPHONE PEDESTAL
G		GAS LINE
		EDGE OF TREES
204	132	ELEVATION CONTOUR
X175.8	X175.8	SPOT ELEVATION
		EDGE OF ASPHALT
		CURB & GUTTER
		SIDEWALK
		PAVEMENT
W	W	WATERLINE W/ VALVE
		FIRE HYDRANT
S	S	SEWERLINE W/ MANHOLE
		STORM DRAIN CLEANOUT
	SD	STORM DRAIN W/ MANHOLE
		STORM DRAIN CATCH BASIN MANHOLE
		CATCH BASIN
		CULVERT
		WATER SERVICE
		SEWER SERVICE
		STORM SERVICE
		GROUND WATER TABLE
		STORM DRAIN CLEANOUT

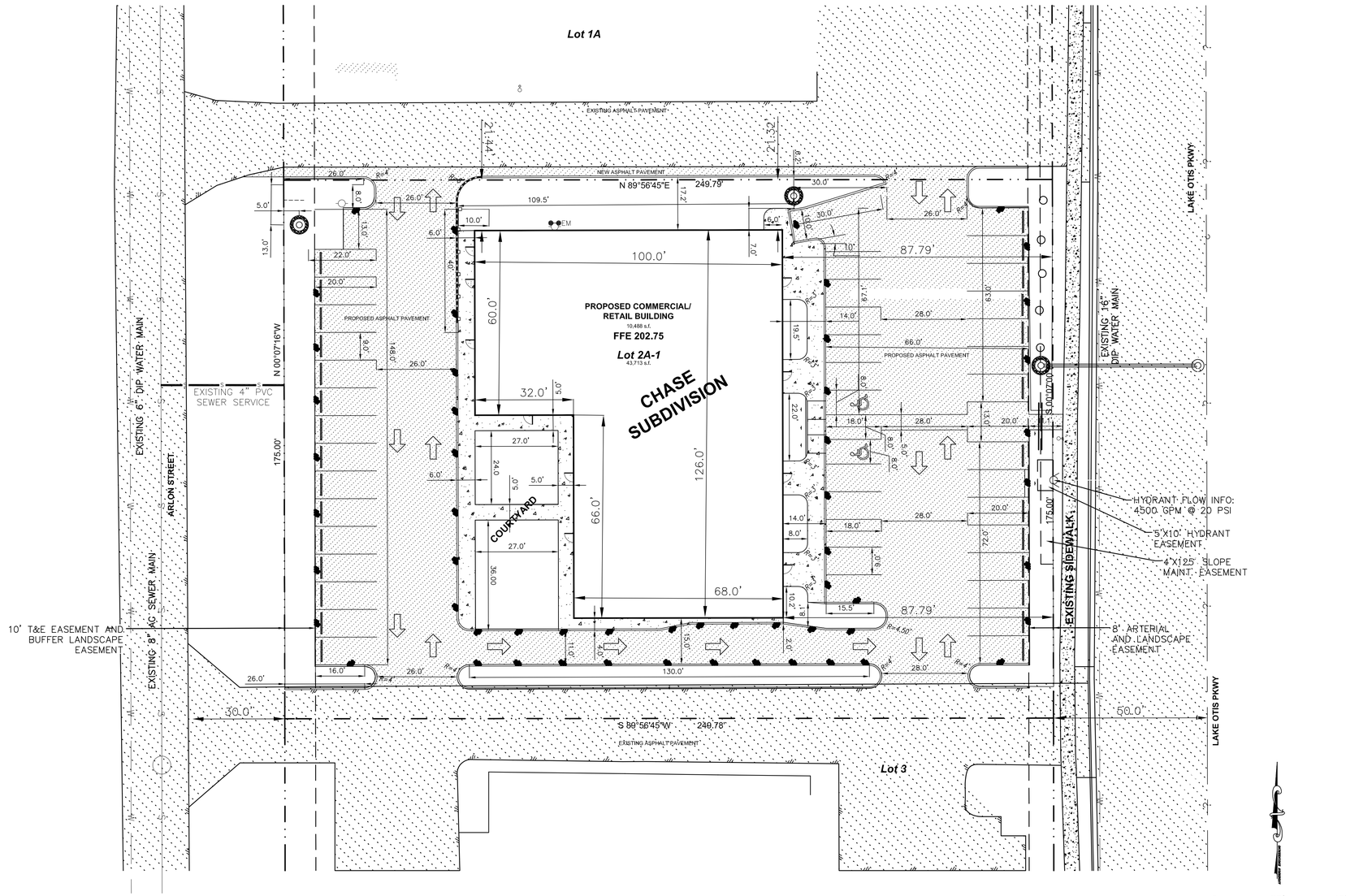

LAYOUT PLAN
1" = 20'

0 20' 40'
SCALE 1" = 20'

STATE OF ALASKA
49 TH
Michael E. Anderson
4381-E
4/11/2016
REGISTERED PROFESSIONAL ENGINEER

ANDERSON ENGINEERING
800 E Dimond, Suite 3-540 | Anchorage, Alaska 99515
T 907.522.7773 | F 907.677.7766

GRADING PLAN
ADAMS HILL CENTER
CHASE SUBDIVISION BLOCK 2, LOT 2A-1
8950 LAKE OTIS PARKWAY
Anchorage, Alaska

NO.	REVISION/ISSUE	DATE

DRAWN: MEA | CHECKED: MEA
DATE: 3/9/2016
PHASE: 100%
JOB NO.: -----
DRAWING TITLE: LAYOUT PLAN
SHEET NO.: C4

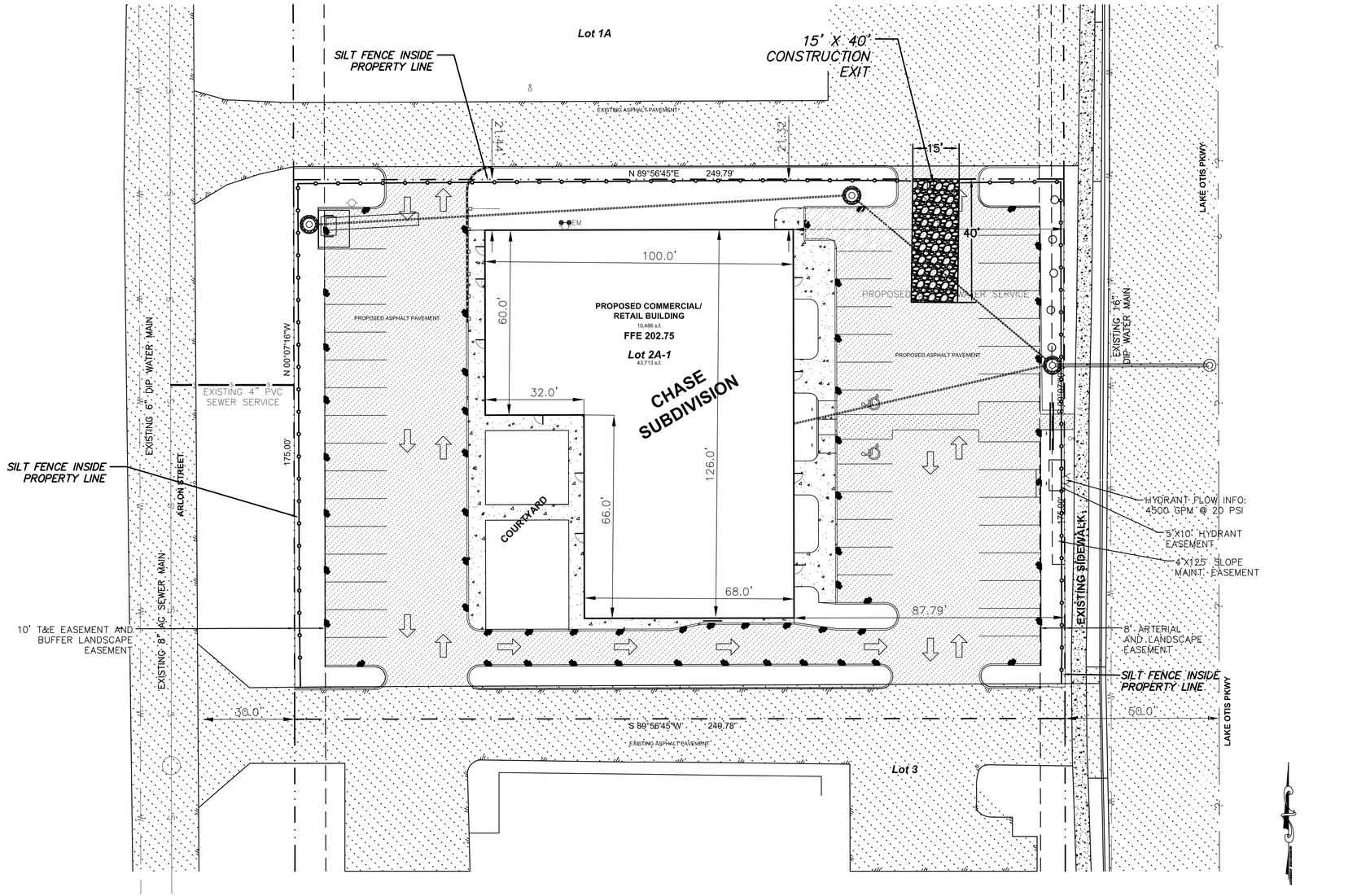

SEWER AND WATER SERVICES PLAN
1" = 20'

STATE OF ALASKA
49 TH
Michael E. Anderson
4381-E
3/9/2016
REGISTERED PROFESSIONAL ENGINEER

ANDERSON ENGINEERING
800 E Dimond, Suite 3-540 | Anchorage, Alaska 99515
T 907.522.7773 | F 907.677.7766

GRADING PLAN
ADAMS HILL CENTER
CHASE SUBDIVISION BLOCK 2, LOT 2A-1
8950 LAKE OTIS PARKWAY
Anchorage, Alaska

NO.	REVISION/ISSUE	DATE

DRAWN: MEA | CHECKED: MEA
DATE: 3/9/2016
PHASE: 100%
JOB NO.: -----
DRAWING TITLE: EROSION CONTROL PLAN
SHEET NO.: C5

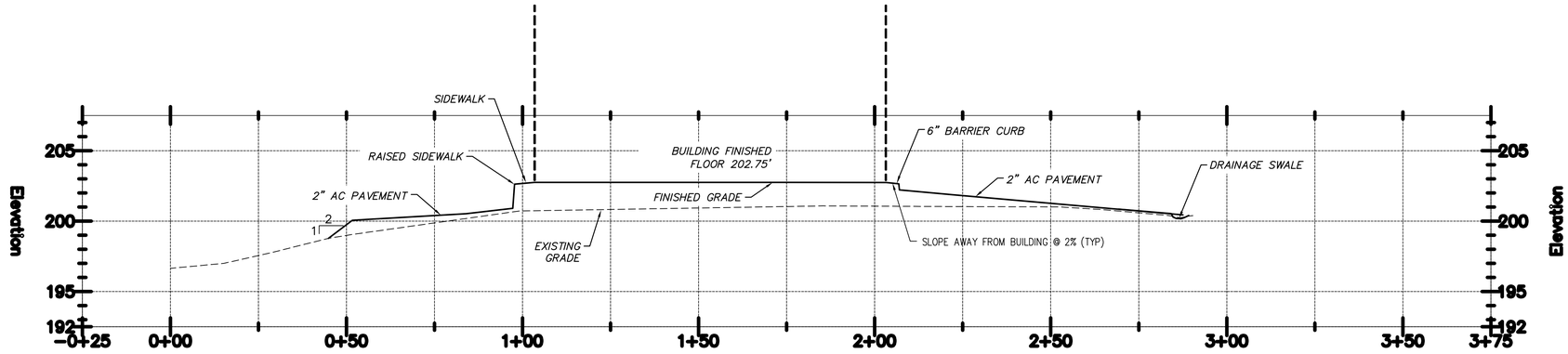

WEST-EAST SECTION
THROUGH BUILDING NORTH
SECTION A-A
1" = 20'

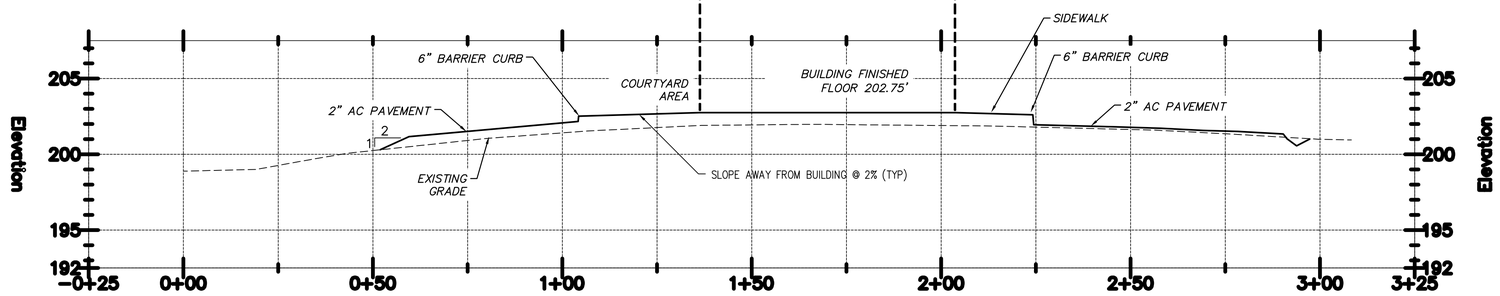

WEST-EAST SECTION
THROUGH BUILDING SOUTH
SECTION B-B
1" = 20'

STATE OF ALASKA
49 TH
Michael E. Anderson
4381-E
3/9/2016
REGISTERED PROFESSIONAL ENGINEER

ANDERSON ENGINEERING
800 E Dimond, Suite 3-540 Anchorage, Alaska 99515
T 907.522.7773 F 907.677.7766

GRADING PLAN
ADAMS HILL CHILD CENTER

CHASE SUBDIVISION BLOCK 2, LOT 2A-1
8950 LAKE OTIS PARKWAY
Anchorage, Alaska

NO.	REVISION/ISSUE	DATE

DRAWN: MEA CHECKED: MEA
DATE: 3/9/2016
PHASE: 100%
JOB NO.: -----
DRAWING TITLE: SITE SECTIONS 1
SHEET NO.: C6

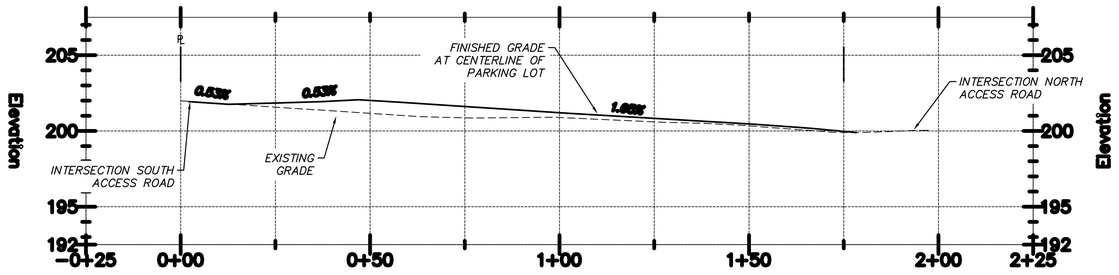

NORTH-SOUTH SECTION
THROUGH ROAD/PARKING LOT WEST SIDE
SECTION C-C
1" = 20'

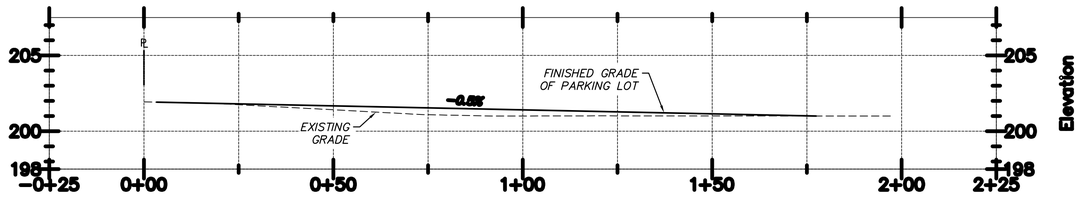

NORTH-SOUTH SECTION
THROUGH ROAD/PARKING LOT EAST SIDE
SECTION E-E
1" = 20' HORIZONTAL
1"= 5' VERTICAL

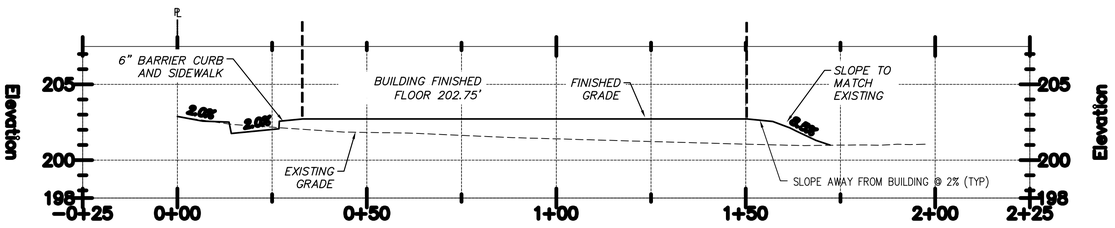

NORTH-SOUTH SECTION
THROUGH BUILDING
SECTION D-D
1" = 20' HORIZONTAL
1"= 5' VERTICAL

STATE OF ALASKA
49 TH
Michael E. Anderson
4381-E
3/9/2016
REGISTERED PROFESSIONAL ENGINEER

ANDERSON ENGINEERING
800 E Dimond, Suite 3-540 — Anchorage, Alaska 99515
T 907.522.7773 — F 907.677.7766

GRADING PLAN
ADAMS HILL CENTER

CHASE SUBDIVISION BLOCK 2, LOT 2A-1
8950 LAKE OTIS PARKWAY
Anchorage, Alaska

NO.	REVISION/ISSUE	DATE

DRAWN: MEA | CHECKED: MEA
DATE: 3/9/2016
PHASE: 100%
JOB NO.: -----
DRAWING TITLE: SITE SECTIONS 2
SHEET NO.: C7

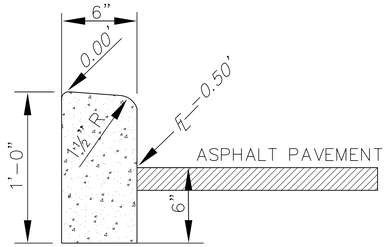

6" BARRIER CURB

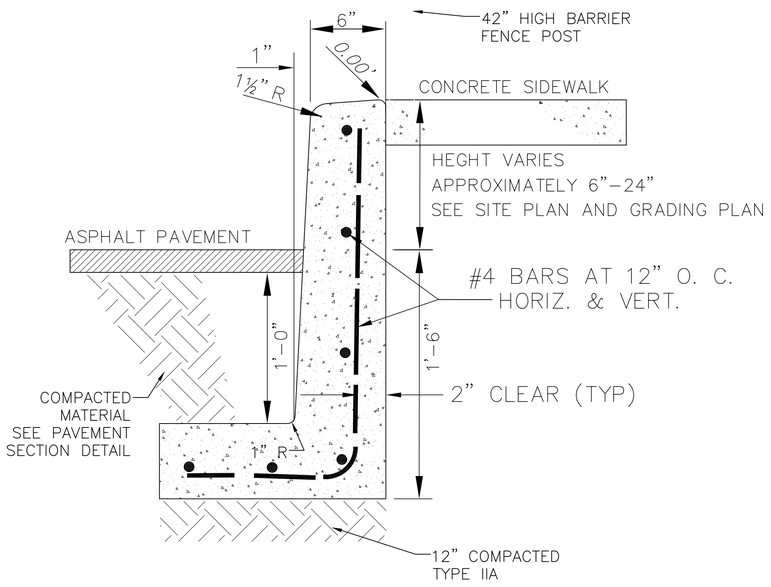

CURB RETAINING WALL

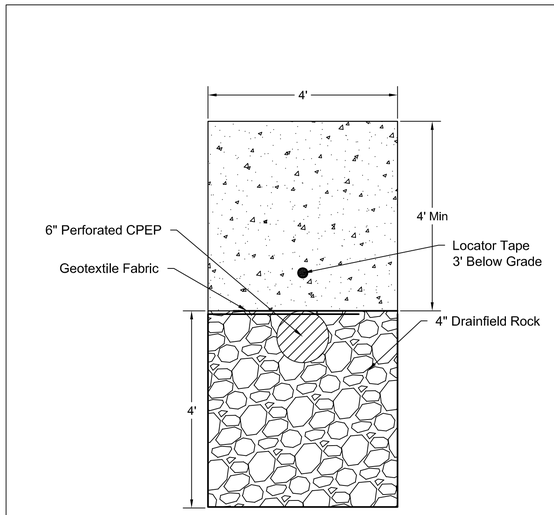

ABSORPTION TRENCH DETAIL

NO SCALE - 3' Width

Provide 4" Insulation Where Bury < 4'

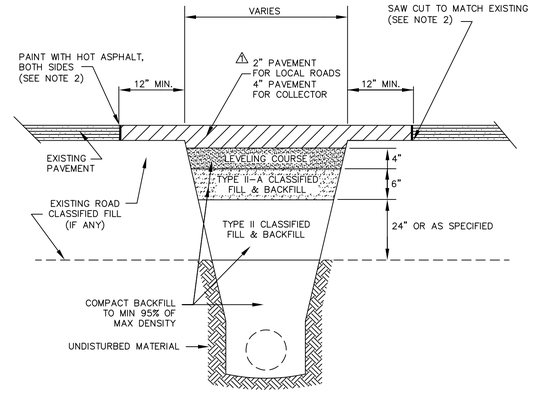

NOTES:
1. ENGINEER OR PERMITTING AGENCY MAY DIRECT ADDITIONAL AMOUNTS OF SURFACE REPLACEMENT MATERIALS AND/OR TYPE II CLASSIFIED FILL & BACKFILL, BASED UPON FIELD CONDITIONS.
2. AFTER TRENCH BACKFILL HAS BEEN COMPACTED, CONTRACTOR SHALL SAW CUT (REF. SECTION 40.02.5.J) AND REMOVE AN ADDITIONAL 12" FROM EACH EDGE OF THE ORIGINAL CUT. ENGINEER MAY REQUIRE ADDITIONAL REMOVAL IF THE EXISTING SURFACING HAS BEEN LIFTED IN THE REMOVAL PROCESS OR IF THE JOINT DOES NOT OCCUR ON UNDISTURBED MATERIAL. TRIM AND SQUARE THE EDGES OF EXISTING SURFACING, AND REMOVE LOOSE MATERIALS BEFORE PLACING PAVEMENT. CONTRACTOR SHALL PAINT SURFACES AND EDGES OF EXISTING PAVEMENT WITH HOT ASPHALT CEMENT AS SPECIFIED IN THE CONTRACT DOCUMENTS OR AS APPROVED BY THE ENGINEER.
3. MAXIMUM PAVEMENT LIFT THICKNESS IS 2" UNLESS OTHERWISE SPECIFIED IN THE DRAWINGS OR APPROVED BY THE ENGINEER.
4. THIS DETAIL APPLIES TO ALL NON–GRAVEL SURFACES INCLUDING, BUT NOT LIMITED TO, PAVEMENT, RECYCLED ASPHALT PAVEMENT (RAP), AND BITUMINOUS SURFACE TREATMENT, ALSO KNOWN AS CHIP SEAL.

RIGHT–OF–WAY PAVEMENT CUT REPLACEMENT DETAIL

N.T.S.

(MASS 40–2)

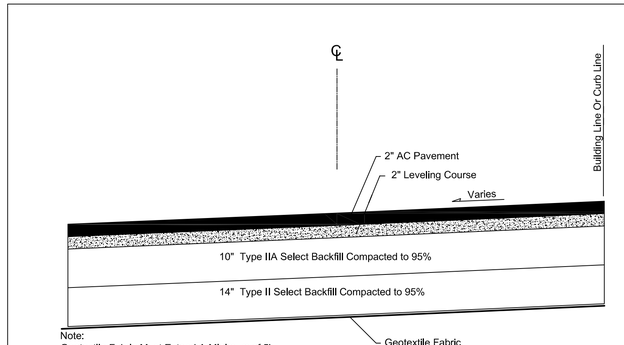

Note:
Geotextile Fabric Must Extend A Minimum of 5' Beyond the Parking Areas And From the Curb Line To The Building Foundation.

DRIVEWAY AND PARKING SECTION

NO SCALE

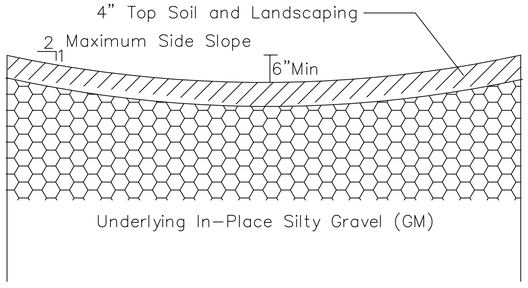

DRAINAGE SWALE DETAIL

NO SCALE

4' Min, 8' Max Width

1.5% Min Longitudinal Slope

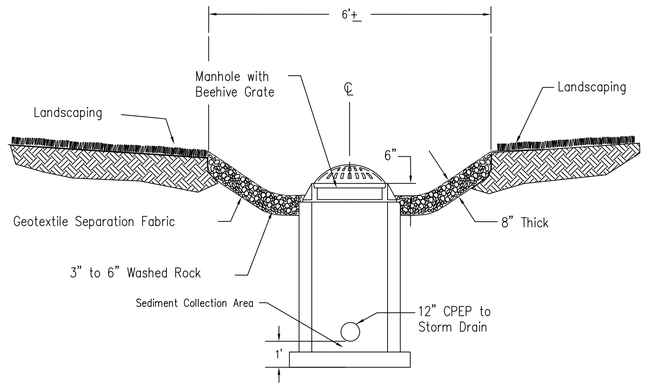

BEEHIVE GRATE DETAIL

NO SCALE

STATE OF ALASKA
49 TH
Michael E. Anderson
4381-E
3/9/2016
REGISTERED PROFESSIONAL ENGINEER

ANDERSON ENGINEERING
800 E Dimond, Suite 3-540 Anchorage, Alaska 99515
T 907.522.7773 F 907.677.7766

GRADING PLAN
ADAMS HILL CENTER
CHASE SUBDIVISION BLOCK 2, LOT 2A-1
8950 LAKE OTIS PARKWAY
Anchorage, Alaska

NO.	REVISION/ISSUE	DATE

DRAWN: MEA | CHECKED: MEA

DATE: 3/9/2016

PHASE: 100%

JOB NO.: -----

DRAWING TITLE: CIVIL DETAILS 1

SHEET NO.: C8

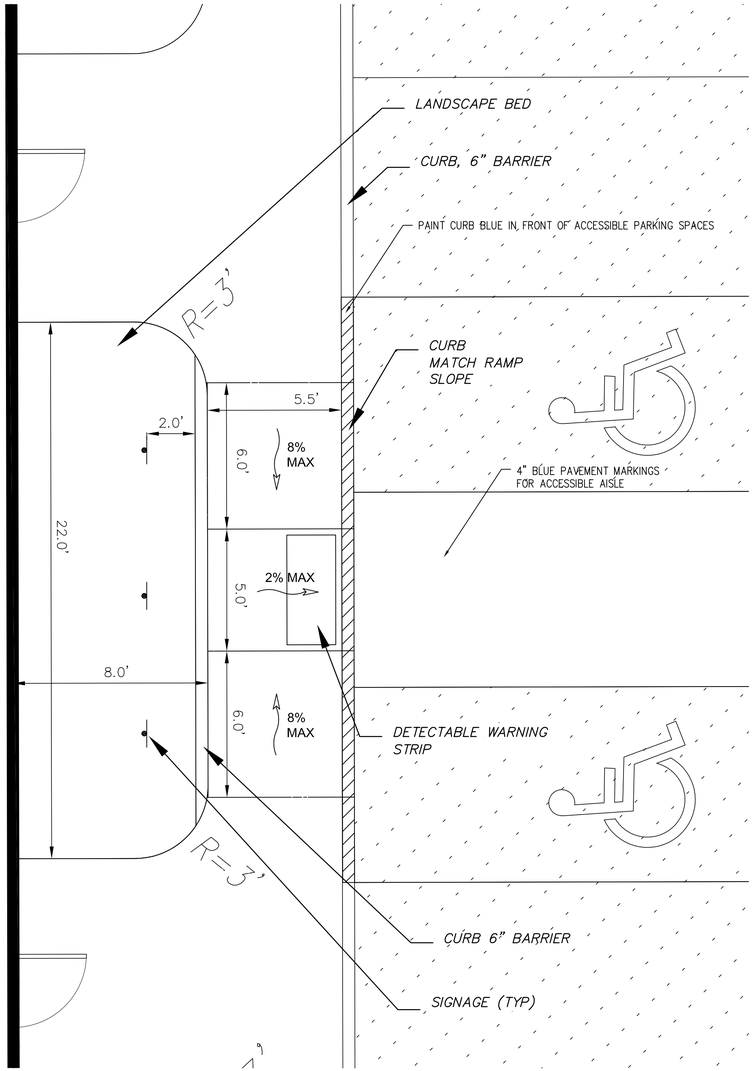

ACCESSIBLE RAMP DETAILS
N.T.S.

1. TRANSITION CURBS TO ACCOMMODATE RAMP SLOPE.
2. MASS TYPE 1A CURB TO BE INSTALLED AT BOTTOM OF RAMP.
3. DETECTABLE WARNING STRIP TO BE INSTALLED PER MANUFACTURERS' RECOMMENDATION. DETECTABLE WARNING STRIP TO BE APPROVED BY OWNER'S REPRESENTATIVE. SEE MASS SECTION 30.04 FOR APPROVED MANUFACTURERS AND SUPPLIERS.
4. SEE GRADING PLAN FOR ELEVATIONS.

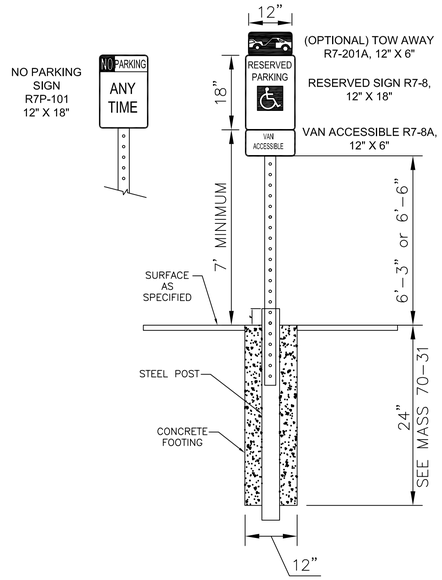

NO PARKING SIGN DETAILS

1. SIGNS CAN BE MOUNTED ON A BUILDING PROVIDED THEY ARE NOT OBSTRUCTED FROM VIEW. MOUNTING HEIGHT ON BUILDINGS IS THE SAME AS POLE HEIGHT MOUNTING.
2. SIGNS CAN BE MOUNTED ON CHAIN LINK FENCE. MOUNTING HEIGHT SHALL BE THE SAME AS POLE HEIGHT IF FENCE PROVIDES SUCH HEIGHT. IF NOT, TOP OF SIGN MAY BE MOUNTED TO TOP OF FENCE. MINIMUM HEIGHT IS 4.5 FEET TO TOP OF FENCE.
3. SIGNS SHALL NOT BE MOUNTED ON DOORS OR WINDOWS AND CAN NOT BE MORE THAN 10 FEET FROM THE EDGE OF THE PARKING STALL.
4. ALL ACCESSIBLE SPACES SHALL HAVE A R7-8 SIGN. THE R7-8 SIGNS SHALL BE CENTERED ON 8 FOOT PARKING STALLS.
5. INSTALL A "NO PARKING" SIGN CENTERED AT LEAST 4 FEET IN FRONT OF THE 8-FOOT WIDE VAN ACCESSIBLE ACCESS AISLE.
6. AN ACCESSIBLE AISLE CAN BE SHARED BY 2 ACCESSIBLE SPACES.
7. ALL PARKING STRIPING SHALL BE 4" WHITE MARKING PER MTUCD SECTION 3b.19.
8. ADA ACCESS AISLE STRIPING SHALL BE 4" BLUE MARKING.

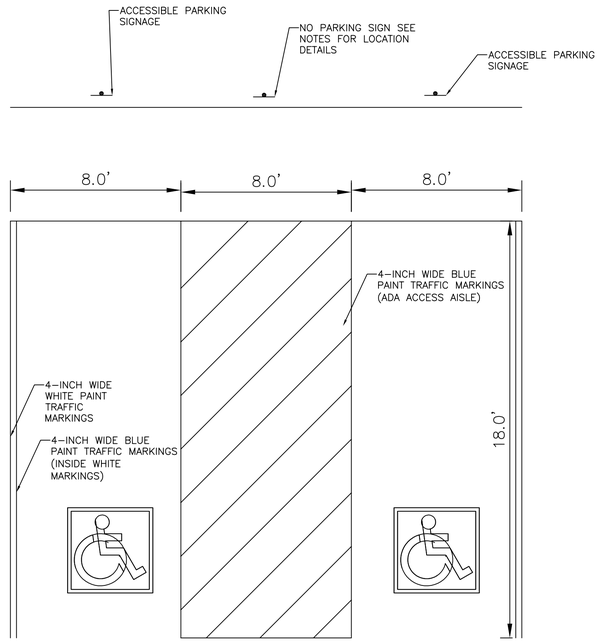

TYPICAL A.D.A. PARKING
N.T.S.

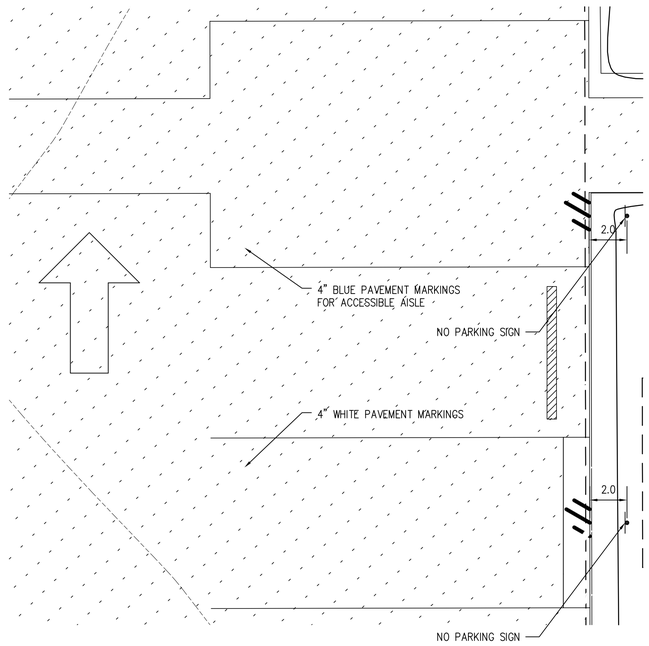

NO PARKING SPACE DETAILS
N.T.S.

NOTE: FOLLOW THE SAME MARKING DETAILS FOR THE 30' LOADING ZONE.

STATE OF ALASKA
49 TH
Michael E. Anderson
4381-E
4/11/2016
REGISTERED PROFESSIONAL ENGINEER

ANDERSON ENGINEERING
800 E Dimond, Suite 3-540 | Anchorage, Alaska 99515
T 907.522.7773 | F 907.677.7766

GRADING PLAN
ADAMS HILL CENTER
CHASE SUBDIVISION BLOCK 2, LOT 2A-1
8950 LAKE OTIS PARKWAY
Anchorage, Alaska

NO.	REVISION/ISSUE	DATE

DRAWN: MEA | CHECKED: MEA
DATE: 4/11/2016
PHASE: 100%
JOB NO.: -----
DRAWING TITLE: CIVIL DETAILS 2
SHEET NO.: C9

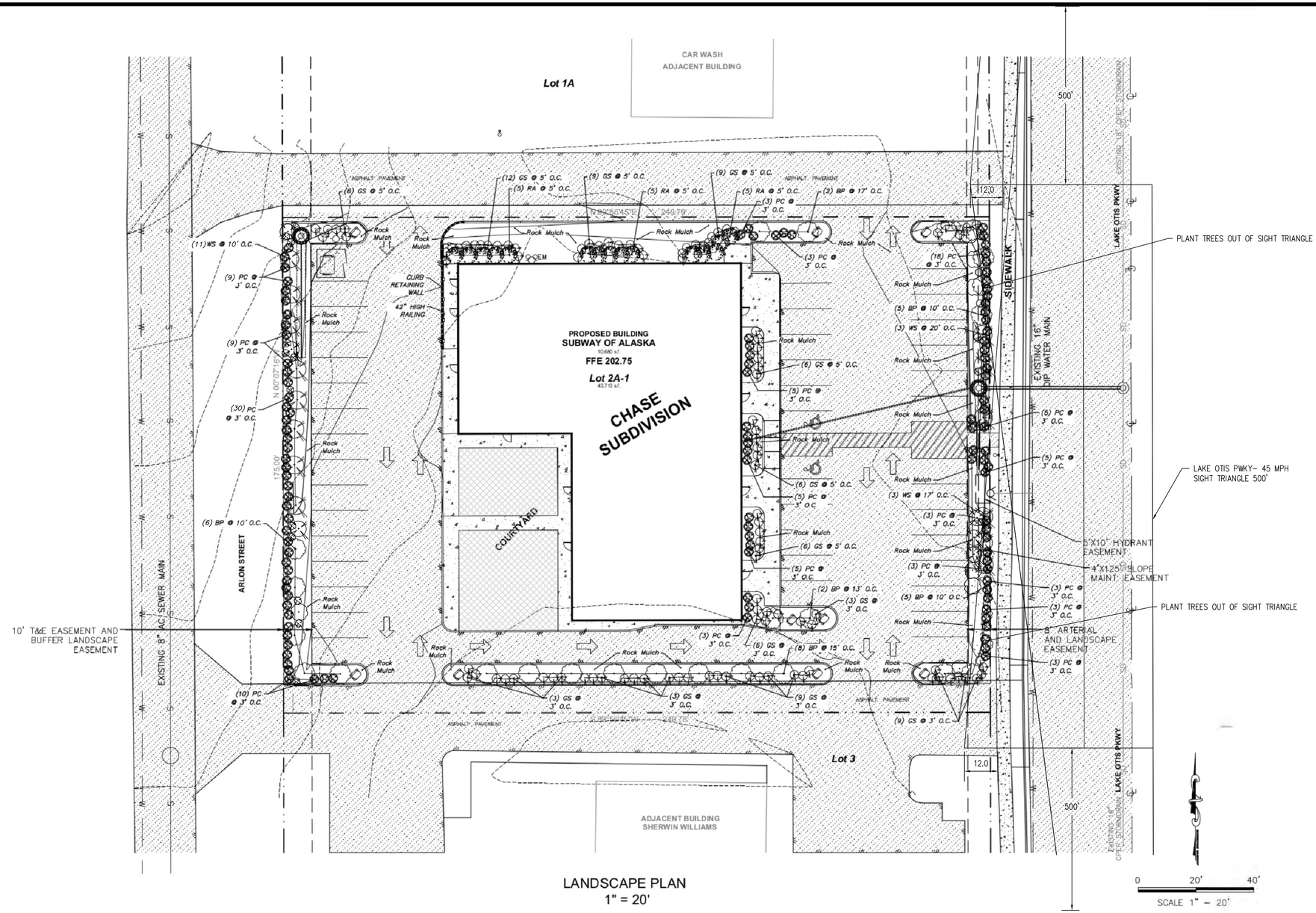

LANDSCAPE PLAN
1" = 20'

	LANDSCAPE SCHEDULE						
SYMBOL	ABBREV	COMMON NAME	SCIENTIFIC NAME	QUANTITY	SIZE	ROOT	REMARKS
	BP	White Paper Birch	Betula Papyrifera	28	2" Caliper	Ball and Burlap	
	WS	White Spruce	Picea glauca	17	Min. 6' Height	Ball and Burlap	Nursery Grown, Fully Branched to Base, Height to Spread Ratios No Less Than Five to Three
	RA	Alpine Currant	Ribes Alpinum	15	Min. 18" Height	Container	
	GS	Goldflame Spiraea	Spiraea japonica 'Goldflame'	107	Min. 18" Height	Container	Other colors to be approved by owner.
	PC	Peking Cotoneaster	Cotoneaster acutifolius	126	Min. 24" Height	Container	
		Boulder		9	3'x4', 2–3' Height		Size May Vary Depending on Field Location

4" Topsoil and Seed, Approximately 2,200 Square Feet, Municipality of Anchorage Standard Specifications, Schedule Mowable Seed Mix:
5% Annual Ryegrass
30% Kentucky Bluegrass 'Nugget'
25% Kentucky Bluegrass 'Merion'
40% Boreal Fescue
Apply at 6Lbs per 1000 Square Feet

All Other Planting Beds, Individual Trees, and Shrubs, Install 2"–6" Natural Round Rock, Approximately 7000 Square Feet. No More Than 3" Depth in Planting Pit Areas.

All Trees and Shrubs and Boulders To Be Placed 2' Clear From Edges of Curbs and Not Planted In Drainage Ways.

All Tree and Shrub Locations Shall Be Approved By Owner's Representative Prior To Planting.

Planting Bed Edge Shall Be Shovel Cut with Flat Shovel When Adjacent to Turf Areas.

STATE OF ALASKA
49 TH
Michael E. Anderson
4381-E
4/19/2016
REGISTERED PROFESSIONAL ENGINEER

ANDERSON ENGINEERING
800 E Dimond, Suite 340 Anchorage, Alaska 99515
T 907.522.2773 F 907.677.7766

LANDSCAPE PLAN
SUBWAY OF ALASKA
CHASE SUBDIVISION BLOCK 2, LOT 2A-1
8950 LAKE OTIS PARKWAY
Anchorage, Alaska

NO.	REVISION/ISSUE	DATE

DRAWN: MEA CHECKED: MEA
DATE: 4/19/2016
PHASE: 100%
JOB NO.: -----
DRAWING TITLE: LANDSCAPE PLAN
SHEET NO.: C10

ADAMS HILL CENTER
OUTLINE SPECIFICATIONS

GENERAL NOTE
Building shell to be complete to include exterior finishes, thermal insulation, vapor barriers, doors, windows, roofing, flashing, and gypsum wallboard interior wall finish. Building interior shall be ready for future tenant improvements which will include future floor finish, walls, ceilings, painting, plumbing, ductwork, lighting and power distribution.

SECTION 03310 CONCRETE
See structural notes for concrete submittals, reinforcing, mix and strength requirements.
Install 6 mil poly vapor barrier on grade prior to placing concrete at building interior floors.
Slab finish to be smooth trowel.
Seal with one coat Cure-N-Seal or equal acrylic curing agent

SECTION 05100 STRUCTURAL STEEL
See structural notes for submittals, detailing, fabrication, erection and quality control.

SECTION 07200 THERMAL INSULATION AND VAPOR RETARDERS
Foundation insulation to be minimum R-10 extruded polystyrene installed at outside faces of foundation stem walls where concealed below grade.
Exterior wall insulation to be minimum R-21 full thick fiberglass batts installed in wood stud framing cavities.
Install 6 mil polyethylene vapor retarder on warm side of stud framing; tape joints and seams with vapor proof tape; take care to seal vapor retarder tight where joining adjacent construction such as roof decks, joists, beams, slabs and window and door frames.

SECTION 07430 EXTERIOR AIR/WEATHER BARRIER AND SIDING
See A3.1 for selected resin panel colors.
Exterior resin panels to be Fiberesin Stonewood, Parklex, or equal 8mm exterior phenolic panels; panel colors as selected.
Exterior metal siding panels to be Centria, Morin, or equal 20ga Concept Series CS-620 smooth finish, color as selected from Valspar Prismatic Series color line.
Resin panels to be installed over VaproShield RevealShield IT weather/air barrier over plywood sheathing, installed as dry-joint pressure equalized rain-screen system using Northclad EF or equal exposed fastener system to include sub-girts, flashings, splines, clips, and fasteners.
Metal siding panels to be installed over Vaproshield or Contractor's choice weather barrier, installed in accordance with manufacturer's installation instructions.
Submit shop drawings, manufacturer's installation instructions and material/colors for approval.

SECTION 07530 ROOF INSULATION AND ROOF MEMBRANE
Install 6 mil polyethylene vapor retarder over roof sheathing.
Install two layers of 4" mechanically fastened Insulfoam Type II rigid insulation, followed by protection board and fully adhered 0.060 EPDM roof membrane; or mechanically fastened membrane at Contractor's option.
Install solid rubber roof walk pads at roof access hatch with pads around rooftop equipment requiring periodic maintenance, and walkway pads from equipment to roof hatch.
Submit shop drawings and manufacturer's submittal literature for approval of insulation and roofing materials.

SECTION 07620 METAL FLASHING
Install 24 gauge prefinished galvanized steel flashing and coping as shown on drawings and as required for weathertight installation.
Provide base flashing at foundation insulation as detailed on drawings.

SECTION 08400 ALUMINUM STOREFRONT SYSTEM
Storefront glazing system to be contractor's choice extruded aluminum similar to Kawneer Tri-Fab 451, with 3/4" face caps.
Doors to be medium stile 36"w x 84"h with panic exit devices, 1" diameter x 18" offset stainless steel pulls, push-side closers.
Aluminum finish to be clear anodized.
Submit shop drawings approval.

SECTION 08800 GLAZING
Exterior glazing to be PPG Solarban 60 clear Low E 1" insulating units.
All glass tempered.

SECTION 09250 GYPSUM WALLBOARD
All gypsum wallboard to be 5/8" Type X screw attached.
Install at all perimeter walls, full height to underside of roof sheathing.
No gypsum wallboard required on bottom of roof structural joists and beams.
Install using appropriate casing bead and corner bead.
All gypsum board exposed to view shall be Finish Level 5, ready for primer and paint.

SECTION 09900 PAINTING
No interior finish painting required.

ADAMS HILL CENTER
DOOR AND HARDWARE SCHEDULE

Door 01	36"x84" medium stile aluminum with tempered insulating glass; continuous hinge; rim panic with outside key, 1"x18" offset stainless steel pull; push side overhead closer with built-in stop; aluminum thresh; fully weatherstripped.
Door 02	36"x84" medium stile aluminum with tempered insulating glass; continuous hinge; rim panic with outside key, 1"x18" offset stainless steel pull; push side overhead closer with built-in stop; aluminum thresh; fully weatherstripped.
Door 03	36"x84" medium stile aluminum with tempered insulating glass; continuous hinge; rim panic with outside key, 1"x18" offset stainless steel pull; push side overhead closer with built-in stop; aluminum thresh; fully weatherstripped.
Door 04	36"x84" medium stile aluminum with tempered insulating glass; continuous hinge; rim panic with outside key, 1"x18" offset stainless steel pull; push side overhead closer with built-in stop; aluminum thresh; fully weatherstripped.
Door 05	36"x84" medium stile aluminum with tempered insulating glass; continuous hinge; rim panic with outside key, 1"x18" offset stainless steel pull; push side overhead closer with built-in stop; aluminum thresh; fully weatherstripped.
Door 06	36"x84" medium stile aluminum with tempered insulating glass; continuous hinge; rim panic with outside key, 1"x18" offset stainless steel pull; push side overhead closer with built-in stop; aluminum thresh; fully weatherstripped.
Door 07	36"x84" medium stile aluminum with tempered insulating glass; continuous hinge; rim panic with outside key, 1"x18" offset stainless steel pull; push side overhead closer with built-in stop; aluminum thresh; fully weatherstripped.
Door 08	36"x84" medium stile aluminum with tempered insulating glass; continuous hinge; rim panic with outside key, 1"x18" offset stainless steel pull; push side overhead closer with built-in stop; aluminum thresh; fully weatherstripped.
Door 09	36"x84" medium stile aluminum with tempered insulating glass; continuous hinge; rim panic with outside key, 1"x18" offset stainless steel pull; push side overhead closer with built-in stop; aluminum thresh; fully weatherstripped.
Door 10	36"x84" insulated steel door in steel frame; 1.5 pair BB-NRP butts; mortise storeroom lock; push side closer with built-in stop; aluminum thresh; fully weatherstripped.

ADAMS HILL CENTER
BUILDING CODE NOTES

2009 International Building Code and related family of ICC Codes
2010 ADA Standards for Accessible Design as published by the Department of Justice 15 September 2010.
Accessible and Usable Buildings and Facilities ICC A117.2-2009 ANSI.

Occupancy	To be determined; Groups B, M
Construction Type	Type V-B, fully sprinklered.
Height	Single Story
Area	10,488sf
Occupant Load	To be determined
Exits	To be determined

Exit doors shall be openable from the inside without the use of a key, special knowledge or effort.
Fire extinguishers shall be provided in locations as shown on plans.
Emergency exit signage and emergency pathway lighting shall be provided as required by Code.
Building address shall be posted in location as shown on drawings, contrasting numerals min 4" high.
A fire department key box shall be provided in location as shown on drawings.

Note to Plan Reviewer: This project is designed as an unoccupied core and shell, tenancy to be determined. Tenant improvement documents will be submitted for MOA plan review at a later date.

STATE OF ALASKA
49TH
Gordon H. Thompson
No. 3275-A
REGISTERED PROFESSIONAL ARCHITECT

ADAMS HILL CENTER
Lake Otis Boulevard

Gordon Thompson Architect
711 M STREET, SUITE 101 ANCHORAGE, ALASKA 99501 (907) 279-2554

DRAWN GORDO
CHECKED STEVE
DATE 8.25.15
JOB NO. 0051
SHEET NO. A1.1
OF: A1.1

ADAMS

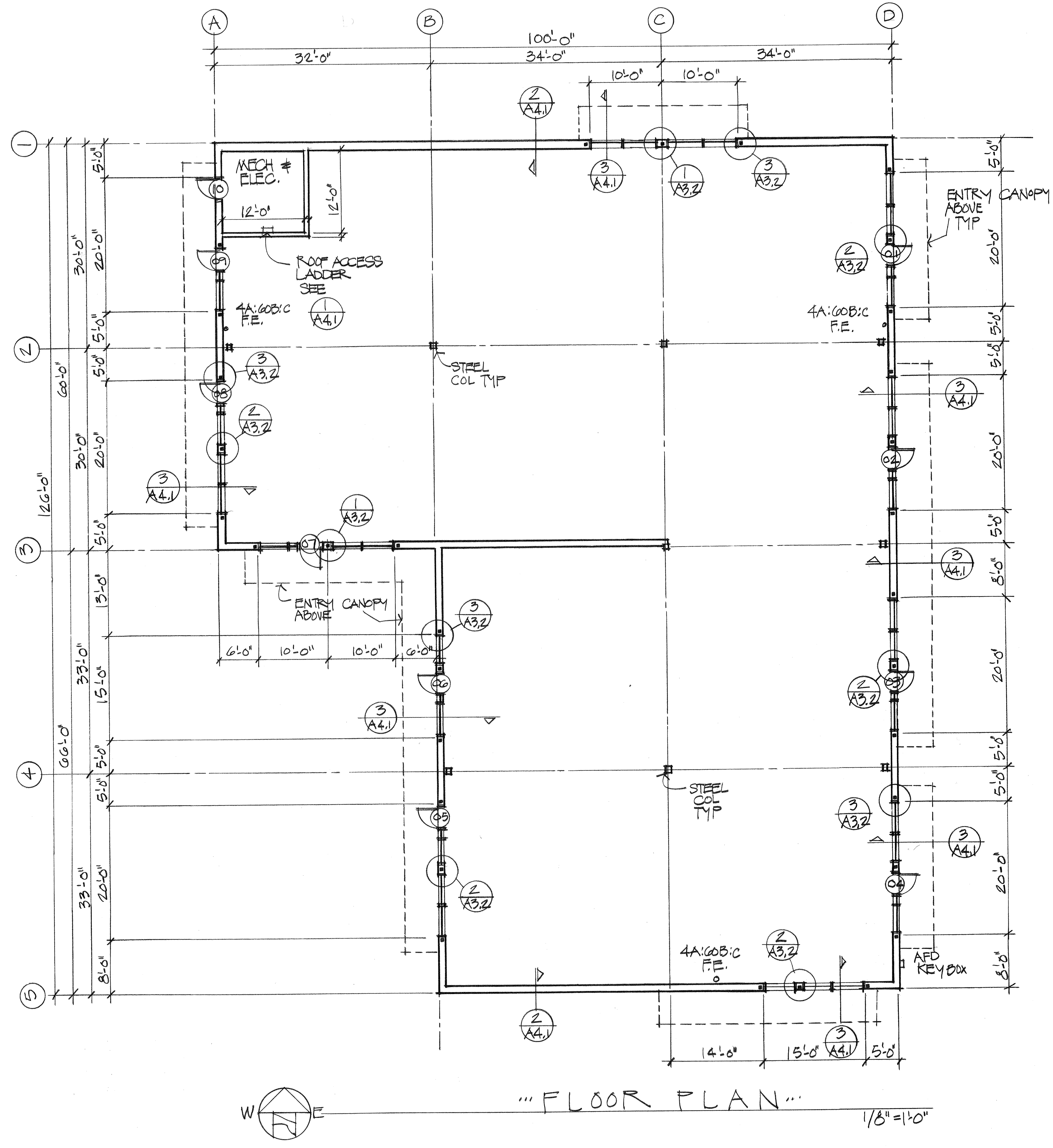

...FLOOR PLAN...

1/8" = 1'-0"

ADAMS HILL CENTER

Lake Otis Boulevard

Gordon Thompson Architect

711 M STREET, SUITE 101 ANCHORAGE, ALASKA 99501 (907) 279-2554

STATE OF ALASKA 49TH Gordon H. Thompson No. 3275-A REGISTERED PROFESSIONAL ARCHITECT

DRAWN	GORDO
CHECKED	STEVE
DATE	8.25.15
JOB NO.	0051
SHEET NO.	A2.1
OF:	A2.2

...ADAMS...

...ROOF PLAN...

1/8" = 1'-0"

ADAMS HILL CENTER

Lake Otis Boulevard

Gordon Thompson Architect

711 M STREET, SUITE 101 ANCHORAGE, ALASKA 99501 (907) 279-2554

DRAWN	GORDO
CHECKED	STEVE
DATE	8.25.15
JOB NO.	0051
SHEET NO.	A2.2
OF:	A2.2

STATE OF ALASKA 49TH
Gordon H. Thompson
No. 3275-A
REGISTERED PROFESSIONAL ARCHITECT

...ADAMS...

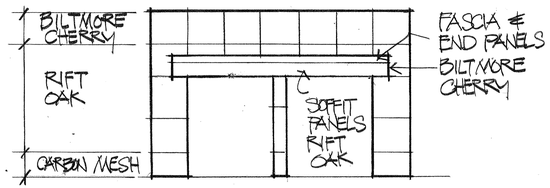

1 / A3.1 ... RESIN PANEL COLORS...

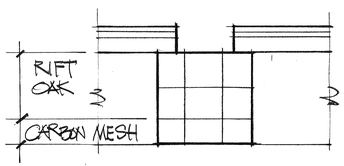

2 / A3.1 ... RESIN PANEL COLORS...

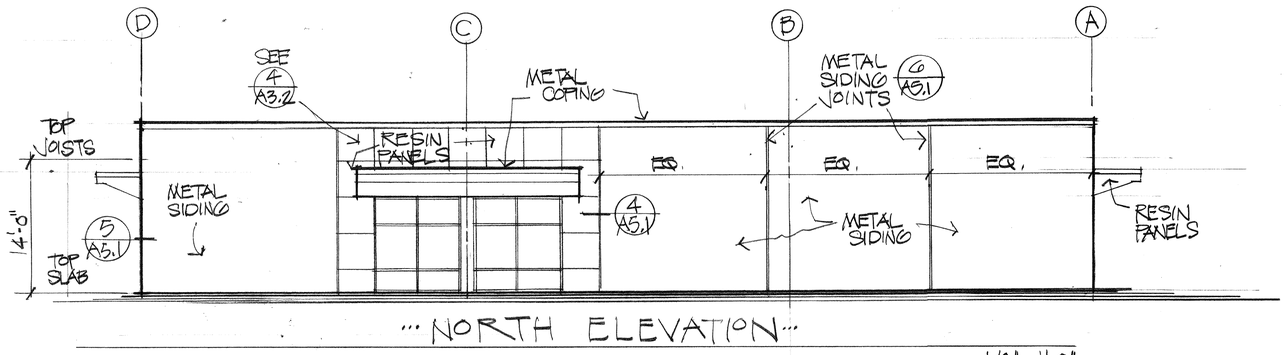

... NORTH ELEVATION ...

1/8" = 1'-0"

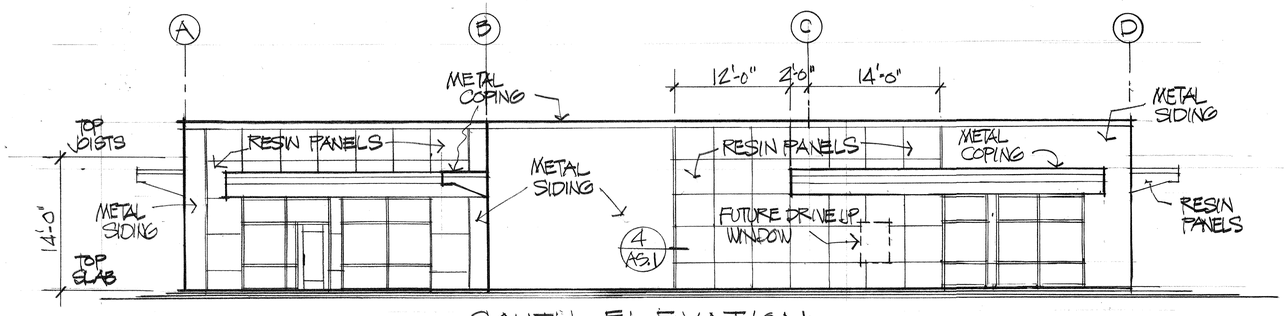

... SOUTH ELEVATION ...

1/8" = 1'-0"

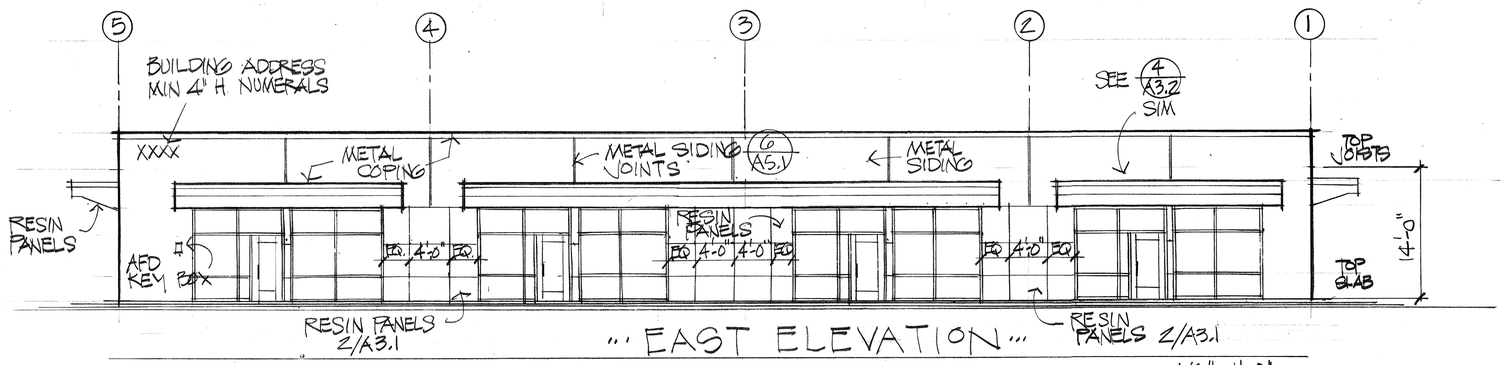

... EAST ELEVATION ...

1/8" = 1'-0"

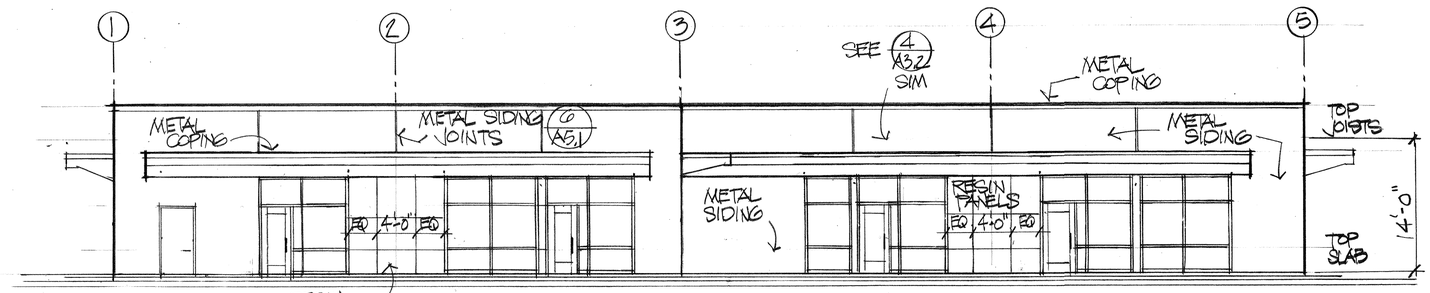

... WEST ELEVATION ...

1/8" = 1'-0"

STATE OF ALASKA 49TH Gordon H. Thompson No. 3275-A REGISTERED PROFESSIONAL ARCHITECT

... ADAMS ...

ADAMS HILL CENTER

Lake Otis Boulevard

Gordon Thompson Architect
711 M STREET, SUITE 101 ANCHORAGE, ALASKA 99501 (907) 279-2554

DRAWN	GORDO
CHECKED	STEVE
DATE	8.25.15
JOB NO.	0051
SHEET NO.	A3.1
OF:	A3.2

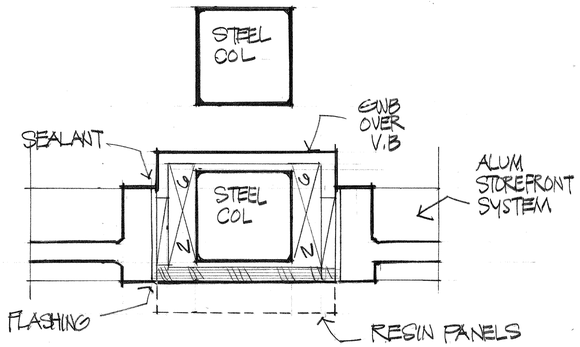

1 / A3.2 ... MULLION DETAIL ...
3"=1'-0"

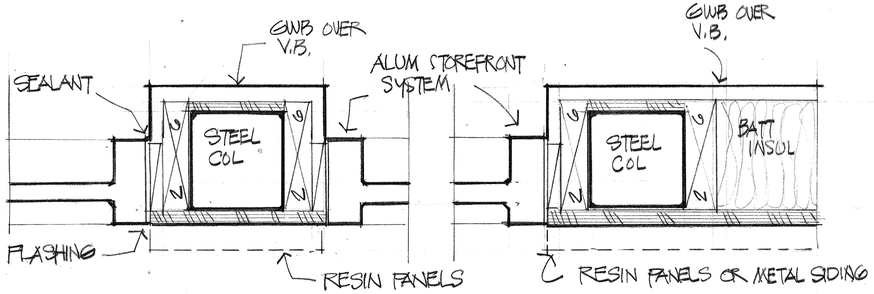

2 / A3.2 ... MULLION DETAIL ...
3"=1'-0"

3 / A3.2 ... JAMB DETAIL ...
3"=1'-0"

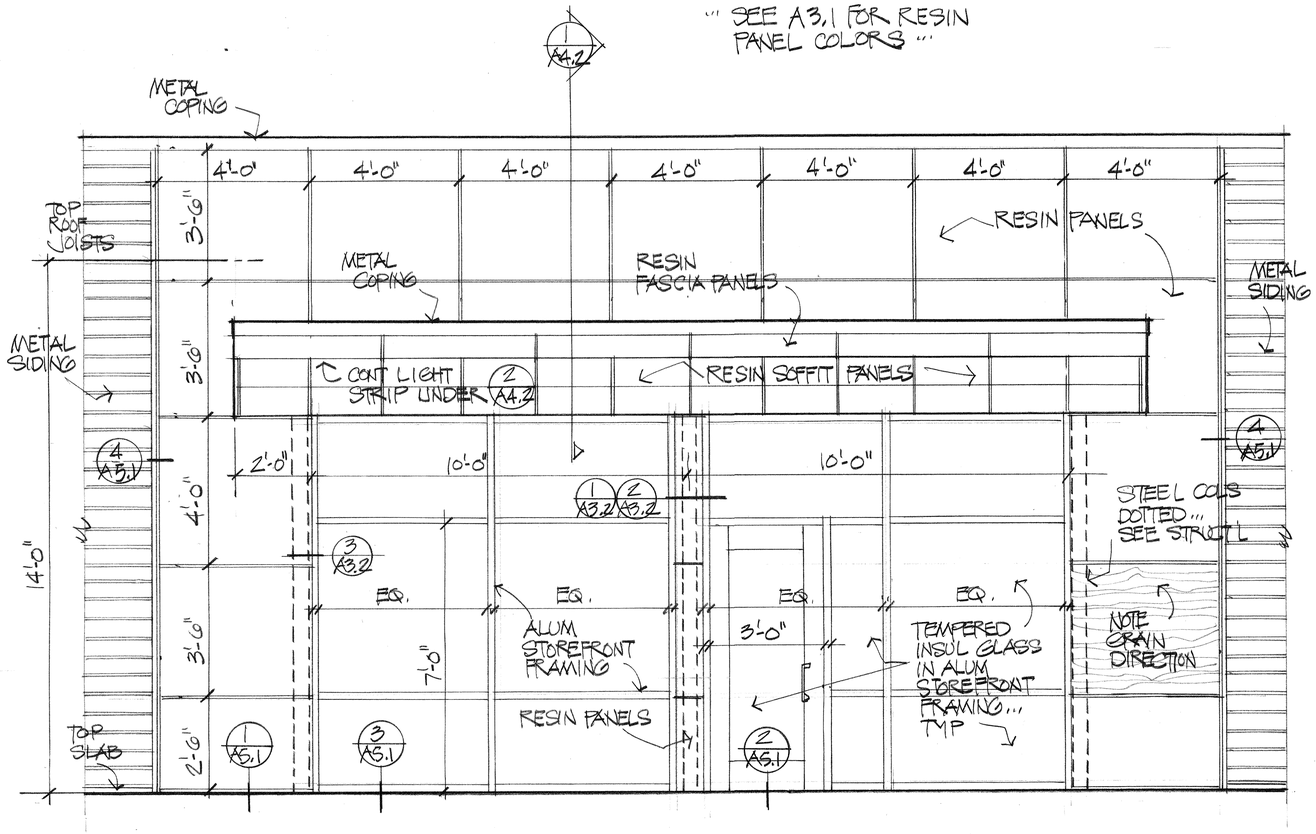

4 / A3.2 ... STOREFRONT ELEVATION ...
1/2"=1'-0"

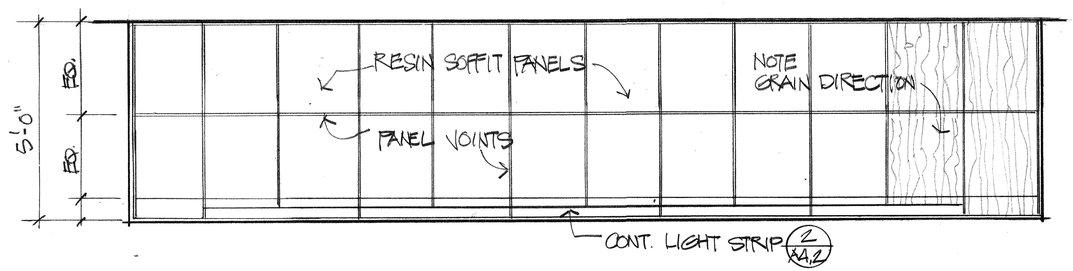

5 / A3.2 ... CANOPY SOFFIT PLAN ...
1/2"=1'-0"

ADAMS HILL CENTER
Lake Otis Boulevard

Gordon Thompson Architect
711 M STREET, SUITE 101 ANCHORAGE, ALASKA 99501 (907) 279-2554

DRAWN	GORDO
CHECKED	STEVE
DATE	8.25.15
JOB NO.	0051
SHEET NO.	A3.2
OF:	A3.2

... ADAMS ...

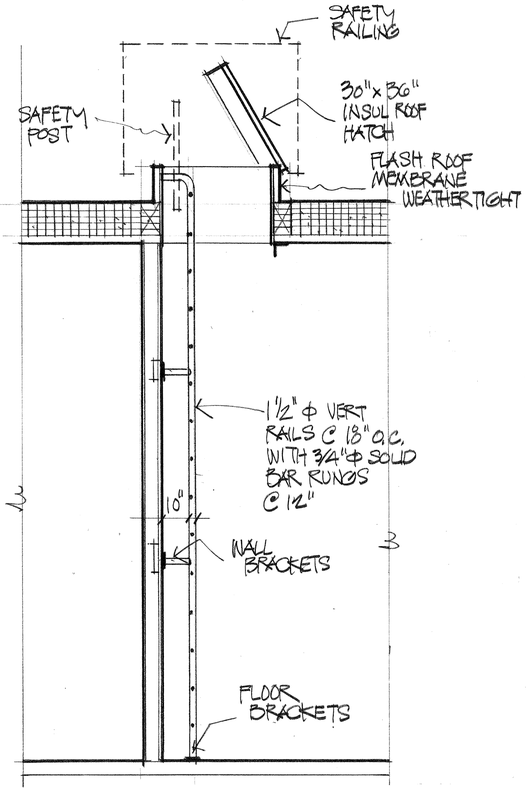

1 A4.1 ··· ROOF ACCESS HATCH ···
1/2" = 1'-0"

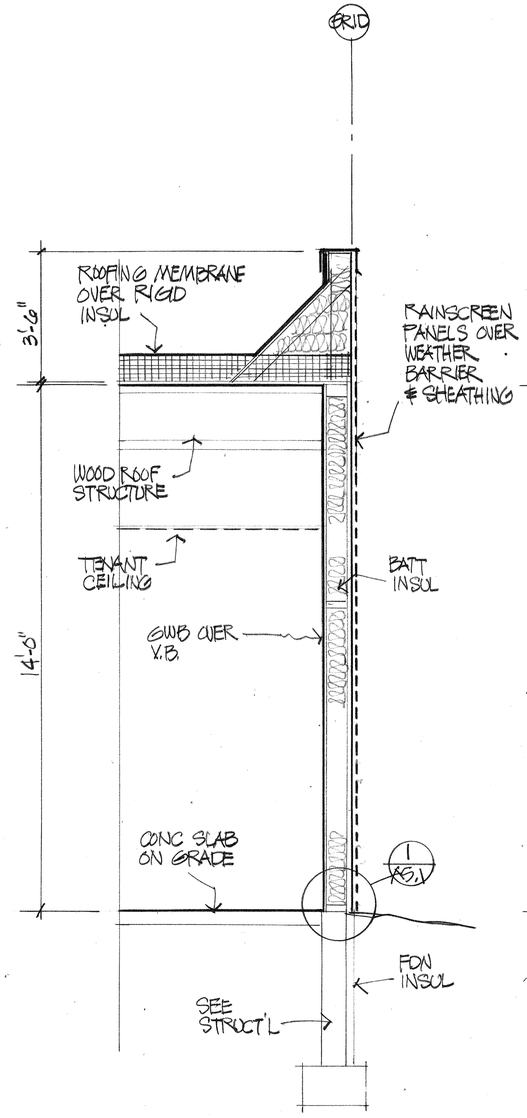

2 A4.1 ··· WALL SECTION ···
1/2" = 1'-0"

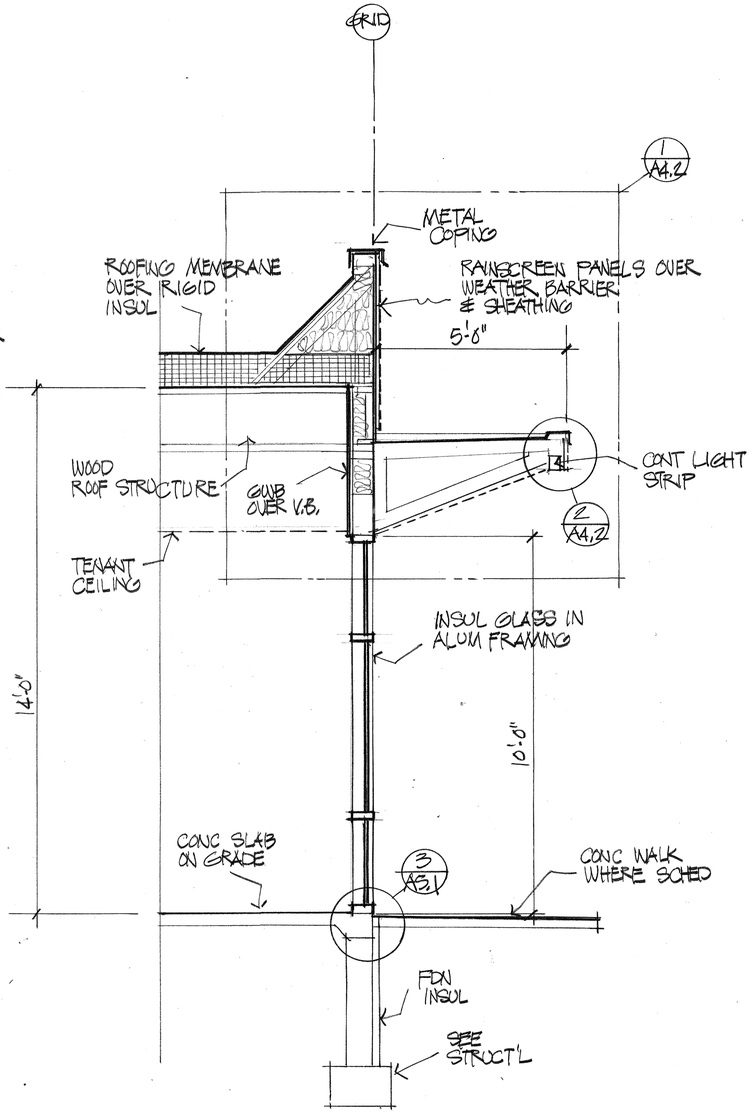

3 A4.1 ··· WALL SECTION ···
1/2" = 1'-0"

ADAMS HILL CENTER
Lake Otis Boulevard

Gordon Thompson Architect
711 M STREET, SUITE 101 ANCHORAGE, ALASKA 99501 (907) 279-2554

DRAWN	GORDO
CHECKED	STEVE
DATE	8.25.15
JOB NO.	0051
SHEET NO.	A4.1
OF:	A4.2

STATE OF ALASKA
Gordon H. Thompson
No. 3275-A
REGISTERED PROFESSIONAL ARCHITECT

···ADAMS···

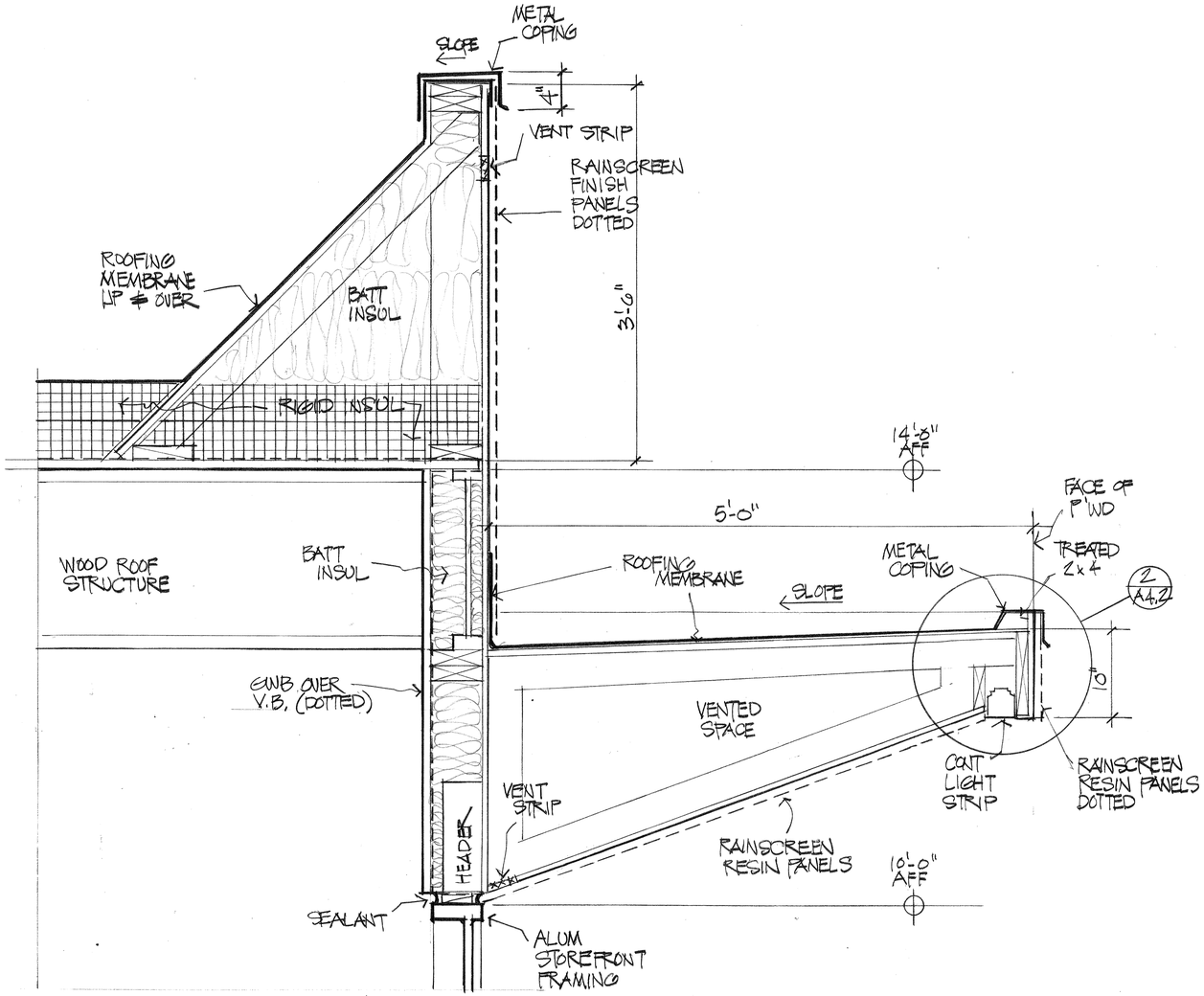

1 A4.2 "CANOPY SECTION"

1 1/2"=1'-0"

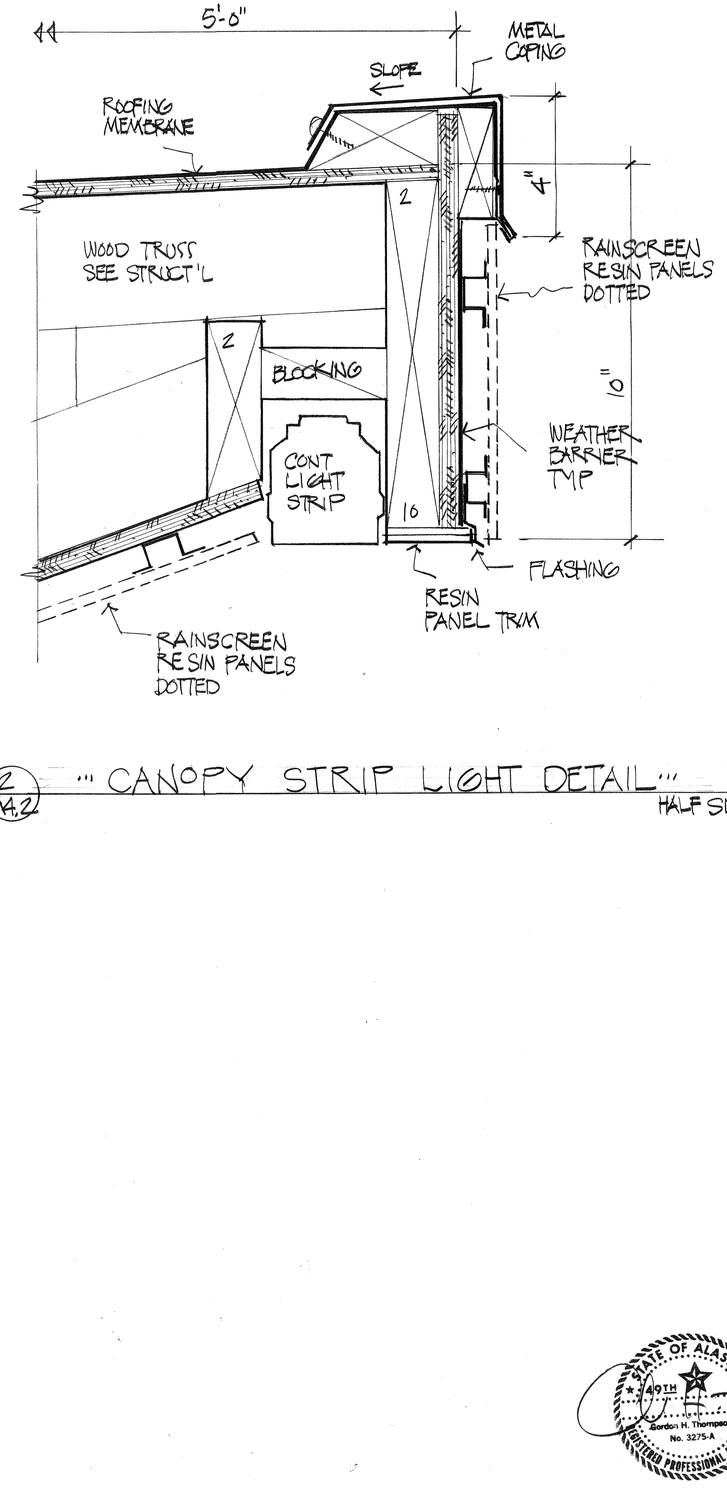

2 A4.2 "CANOPY STRIP LIGHT DETAIL"

HALF SIZE

ADAMS HILL CENTER
Lake Otis Boulevard

Gordon Thompson Architect
711 M STREET, SUITE 101 ANCHORAGE, ALASKA 99501 (907) 279-2554

DRAWN	GORDO
CHECKED	STEVE
DATE	8.25.15
JOB NO.	0051
SHEET NO.	A4.2
OF:	A4.2

STATE OF ALASKA 49TH Gordon H. Thompson No. 3275-A REGISTERED PROFESSIONAL ARCHITECT

"ADAMS"

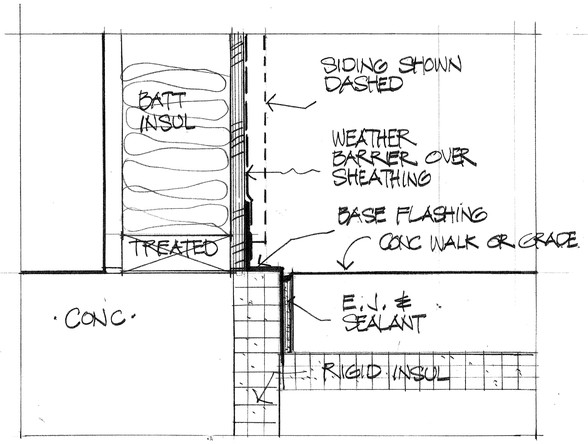

1 A5.1 ... BASE FLASHING ...
3" = 1'-0"

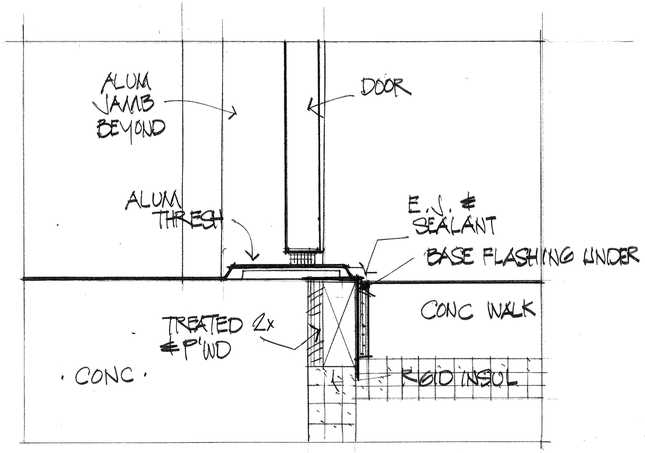

2 A5.1 ... DOOR THRESH ...
3" = 1'-0"

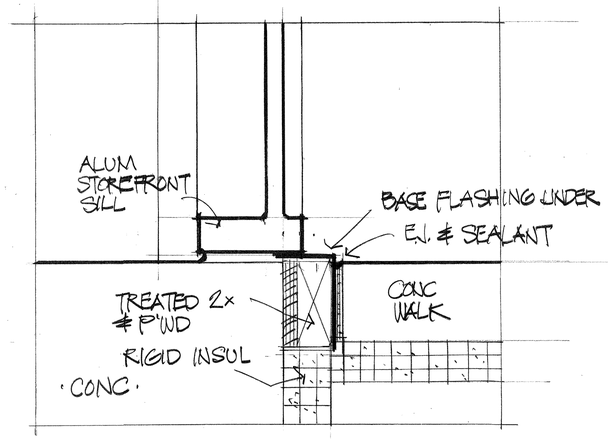

3 A5.1 ... STOREFRONT SILL ...
3" = 1'-0"

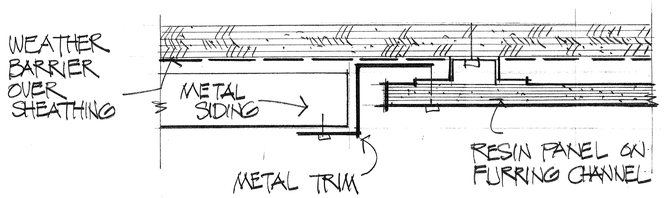

4 A5.1 ... SIDING JOINT ...
FULL SIZE

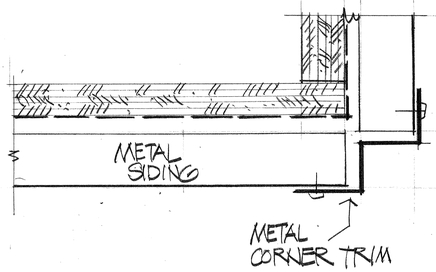

5 A5.1 ... CORNER JOINT ...
FULL SIZE

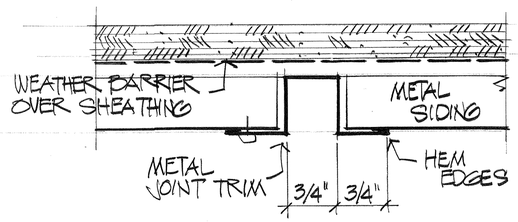

6 A5.1 ... SIDING JOINT ...
FULL SIZE

ADAMS HILL CENTER
Lake Otis Boulevard

Gordon Thompson Architect
711 M STREET, SUITE 101 ANCHORAGE, ALASKA 99501 (907) 279-2554

DRAWN	GORDO
CHECKED	STEVE
DATE	8.25.15
JOB NO.	0051
SHEET NO.	A5.1
OF:	A5.1

STATE OF ALASKA
49TH
Gordon H. Thompson
No. 3275-A
REGISTERED PROFESSIONAL ARCHITECT

... ADAMS ...

STRUCTURAL NOTES

1. DESIGN CRITERIA: (ANCHORAGE, ALASKA)
   CODE: 2009 I.B.C. (ASCE7–05)
   OCCUPANCY CATEGORY II

   GRAVITY LOADS

   ROOF: SNOW LOADS

1.	GROUND SNOW LOAD	(Pg)	= 50 P.S.F.
2.	ROOF SNOW LOAD	(Pf)	= 40 P.S.F.
3.	SNOW IMPORTANCE FACTOR	(Is)	= 1.0
4.	SNOW EXPOSURE FACTOR	(Ce)	= 1.0
5.	THERMAL FACTOR	(Ct)	= 1.0
6.	ADDITIONAL SNOW DRIFT PER BUILDING CODE(S).		
	LIVE LOAD		= 20 P.S.F. (USE SNOW LOAD)
	DEAD LOAD		= 18 P.S.F.

   FLOOR: LIVE LOADS (– INDICATES NOT USED)

1.	UPPER FLOORS	= – P.S.F.
2.	FIRST FLOOR	= 100 P.S.F.
3.	CORRIDORS	= 100 P.S.F.
4.	PARTITIONS	= 15 P.S.F.
5.	STAIRS	= – P.S.F.
6.	STORAGE	= 125 P.S.F.
7.	MECHANICAL	= 125 P.S.F.
	DEAD LOAD (SLAB ON GRADE)	= – P.S.F.

   LATERAL LOADS

   WIND:

1.	3 SECOND GUST WIND SPEED (V3S)		= 110 M.P.H.
2.	WIND IMPORTANCE FACTOR	(Iw)	= 1.0
3.	EXPOSURE CATEGORY		= B
4.	MAIN WIND FORCE RESISTING SYSTEM Q_h WIND LOAD		= 18.5 P.S.F.
5.	WALL COMPONENTS AND CLADDING	(A > 50 SQ. FT.)	(A > 20 SQ. FT.)
	WALLS	= –20 P.S.F.	= –21 P.S.F.
	WITHIN 6 FEET OF EDGES	= –23 P.S.F.	= –25 P.S.F.
6.	ROOF COMPONENTS AND CLADDING	(A > 50 SQ. FT.)	(A > 10 SQ. FT.)
	ROOF	= –21 P.S.F.	= –21 P.S.F.
	WITHIN 6 FEET OF EDGES	= –28 P.S.F.	= –33 P.S.F.
	WITHIN 6 FEET OF CORNERS	= –33 P.S.F.	= –46 P.S.F.

   SEISMIC:

1.	USE GROUP		II
2.	SEISMIC IMPORTANCE FACTOR	(Ie)	= 1.0
3.	SITE CLASS		= D (ASSUMED)
4.	SPECTRAL ACCELERATION		
	SHORT PERIOD	(Ss)	= 1.517
	ONE SECOND	(S1)	= 0.568
5.	SPECTRAL RESPONSE	(SDS)	= 1.0
		(SDI)	= 0.55
6.	DESIGN CATEGORY		= D
7.	SEISMIC RESISTING SYSTEM: PLYWOOD SHEARWALL		
8.	RESPONSE MODIFICATION	(R)	= 6.5
9.	SEISMIC RESPONSE	(cs)	= 0.15
10.	DESIGN BASE SHEAR	V	= $C_S W/1.4$
11.	ANALYSIS METHOD: EQUIVALENT LATERAL FORCE PROCEDURE ALLOWABLE STRESS DESIGN		

2. FOUNDATION: FOUNDATION LEVELS SHOWN ON THE PLANS ARE ESTIMATED. CONTRACTOR TO VERIFY ACTUAL CONDITIONS. ALL DEBRIS, ORGANIC MATERIAL, FROZEN GROUND, REMNANTS OF PRIOR CONSTRUCTION OR ANY DELETERIOUS ON–SITE MATERIAL SHALL BE REMOVED PRIOR TO PLACEMENT OF FOUNDATIONS. EXTERIOR FOOTINGS SHALL BE PLACED A MINIMUM OF 42 INCHES BELOW FINISH GRADE. COMPACT EXISTING SOIL TO 95% MD BEFORE FOOTINGS OR STRUCTURAL FILL ARE PLACED. ALL BACKFILL SHALL BE CLEAN, NON–FROST SUSCEPTIBLE (TYPE II–A), SANDY GRAVEL COMPACTED TO 95% MD. ALLOWABLE SOIL BEARING = 2,500 P.S.F. ALLOWABLE SOIL BEARING SHALL BE VERIFIED BY OWNER.

3. CONCRETE: CONCRETE SHALL HAVE THE MINIMUM QUALITIES PER SCHEDULE, MEASURED, MIXED AND PLACED IN ACCORDANCE WITH ACI STANDARD 304. PROVIDE 5.0 SACK MIX AS A MINIMUM. IF ADDITIONAL SLUMP (UP TO 8 INCHES IS DESIRED FOR PUMPING, A SUPER–PLASTICIZED ADMIXTURE MAY BE ADDED. PRIOR TO CONCRETE PLACEMENT, THE CONTRACTOR MUST SUBMIT A CONCRETE MIX DESIGN PREPARED IN ACCORDANCE WITH THE SPECIFICATIONS TO THE ENGINEER FOR REVIEW AND APPROVAL.

CONCRETE MATERIALS SCHEDULE

STRUCTURAL ELEMENT	f'c CONCRETE COMPRESSIVE STRENGTH @ 28 DAYS (PSI) MIN	WATER CEMENT RATIO MAX	SLUMP ± 1"	AIR ENTRAINMENT % ± 2%	REMARKS
ALL FOOTING U.N.O.	3000	0.50	4	–	
SLAB–ON–GRADE (INTERIOR)	3000	0.45	4	–	
EXTERIOR CONCRETE EXPOSED TO THE WEATHER	4500	0.45	4	6	

CONCRETE FOOTINGS AND WALLS SHALL BE REINFORCED WITH REINFORCING STEEL COMPLYING WITH ASTM A–615, GRADE 60. ALL WELDED REINFORCING SHALL BE ASTM A706 GRADE 60. ALL STEEL SHALL BE DETAILED, FABRICATED AND PLACED IN ACCORDANCE WITH ACI 318–08 AND ACI SP–66–04. BARS SHALL BE SECURELY TIED IN PLACE WITH #16 DOUBLE ANNEALED IRON WIRE. BARS SHALL BE SUPPORTED ON CHAIRS OR WELL CURED CONCRETE BLOCKS. MINIMUM DEPTH OF COVER FOR REINFORCING TO BE:

CONCRETE PLACED ON GROUND	3"
FORMED SURFACES EXPOSED OR ON GROUND	1–1/2"
INTERIOR SURFACES EXPOSED	3/4"

ALL SPLICES SHALL BE LAPPED 44 DIAMETERS. HOOKED BARS TO HAVE STANDARD ACI HOOKS UNO. PROVIDE CORNER BARS TO MATCH HORIZONTAL REINFORCING AT ALL FOOTING AND WALL CORNERS AND JOINTS. PROVIDE SHOP DRAWINGS FOR APPROVAL.

CONCRETE SLABS TO BE 4 OR 6 INCHES IN THICKNESS AS SHOWN ON PLANS. PLACE SLAB REINFORCING IN CENTER OF SLAB. ALL CONCRETE SLABS SHALL BE REINFORCED WITH WELDED WIRE FABRIC IN ACCORDANCE WITH ASTM A–185, GRADE 60 UNLESS OTHERWISE NOTED. WELDED WIRE REINFORCEMENT IS TO BE SUPPLIED IN FLAT SHEETS ONLY. LAP WELDED WIRE REINFORCEMENT TWO FULL MESH LENGTHS AT SPLICES AND WIRE TOGETHER.

CONCRETE SLABS TO BE CURED BY METHOD COMPATIBLE WITH SPECIFIED FLOOR FINISH. WHERE ACCEPTABLE USE A LIQUID MEMBRANE–CURING COMPOUND AT THE MANUFACTURERS RECOMMENDED COVERAGE. SAW JOINTS TO BE CUT AS SOON AS POSSIBLE WITHOUT RAVELING THE SURFACE.

SLEEVES, INSERTS, MECHANICAL OPENINGS, CONDUITS, PIPES, RECESSES, DEPRESSIONS, CURBS AND OTHER EMBEDDED ITEMS TO BE PROVIDED FOR AS SHOWN ON THE ARCHITECTURAL, MECHANICAL AND ELECTRICAL DRAWINGS AND AS REQUIRED BY EQUIPMENT MANUFACTURERS. INSTALLATION OF THESE ITEMS TO BE COORDINATED AND PROVIDED FOR PRIOR TO PLACING CONCRETE.

LEVELING GROUT TO BE NON–SHRINK, NON–METALLIC TYPE, FACTORY PREMIXED GROUT IN ACCORDANCE WITH ASTM C 1107, HAVING A MINIMUM COMPRESSIVE STRENGTH OF NOT LESS THAN 5000 P.S.I.

CONCRETE ENCASED GROUND ELECTRODE (UFER) SHALL BE PROVIDED IN ACCORDANCE WITH THE NEC AND THE ELECTRICAL DESIGN DRAWINGS.

4. ALL POST–INSTALLED DRILLED ANCHORS SET IN CONCRETE SHALL BE:

   A. GALVANIZED ALLTHREAD SET IN HILTI HY 200–A ADHESIVE OR EQUAL. SET AT THE DEPTH SHOWN. SET PER MANUFACTURERS INSTRUCTIONS SO THAT THE HOLE IS FILLED WITH ADHESIVE WHEN COMPLETE.
      1/2"ø EMBED 4 1/4"
      5/8"ø EMBED 5"
      3/4"ø EMBED 6 5/8"

   B. SIMPSON TITEN HD SCREW ANCHORS. SET TO DEPTH SHOWN. INSTALL PER MANUFACTURES INSTRUCTIONS.

5. MASONRY MATERIALS: (NOT USED)

6. STRUCTURAL STEEL SHALL BE DETAILED, FABRICATED, AND ERECTED IN ACCORDANCE WITH THE AMERICAN INSTITUTE OF STEEL CONSTRUCTION "AISC MANUAL" 14TH EDITION. STRUCTURAL STEEL SHALL CONFORM TO THE FOLLOWING SCHEDULE:

STEEL MATERIALS SCHEDULE

STRUCTURAL ELEMENT OR SHAPE	SPECIFICATION	GRADE	REMARKS
W SHAPES	ASTM A–992	50	Fy = 50 KSI
S, M, HP, C, L AND PLATES	ASTM A–36	36	Fy = 36 KSI
HSS, TS	ASTM A500	B	Fy = 46 KSI
STD STL PIPE	ASTM A–53	B	Fy = 35 KSI
ANCHOR RODS	ASTM F–1554	36	GALVANIZED
ANCHOR BOLTS	ASTM A–307	A	GALVANIZED
BOLTS – STL TO STL	ASTM A325–N	–	

STRUCTURAL STEEL CONNECTIONS TO BE SHOP WELDED AND FIELD BOLTED UNLESS OTHERWISE NOTED. FABRICATE AND INSTALL BEAMS WITH NATURAL CAMBER UP.

ALL ANCHOR BOLTS AND ANCHOR RODS SHALL BE PER SCHEDULE. LOCATE ALL ANCHORS WITH TEMPLATES PRIOR TO PLACING CONCRETE. ANCHOR BOLTS AND ANCHOR RODS SHALL BE TIGHTENED TO A SNUG TIGHT CONDITION.

WELDING TO BE IN ACCORDANCE WITH THE AMERICAN WELDING SOCIETY (AWS) "STRUCTURAL WELDING CODE – ANSI/AWS D1.1" (LATEST EDITION) USE E70XX ELECTRODES UNLESS OTHERWISE INDICATED ON THE DRAWINGS. ALL WELDS TO BE 3/16–INCH MINIMUM. ALL WELDS SHALL HAVE FILLER METAL WITH CHARPY V–N TOUGHNESS OF 20FT–LBS @ –20°F.

ALL WELDING SHALL BE BY CERTIFIED WELDERS PER THE AMERICAN WELDING SOCIETY FOR THE ROD AND POSITION USED. ALL STEEL FABRICATION SHALL BE PERFORMED BY AN AISC CERTIFIED SHOP OR SHALL BE INDEPENDENTLY SPECIAL INSPECTED TO MEET AISC REQUIREMENTS. THE STEEL FABRICATOR SHALL SUBMIT A CERTIFICATE OF COMPLIANCE TO THE ENGINEER AT THE COMPLETION OF THE FABRICATION.

APPLY TWO COATS OF PRIMER PAINT TO ALL METAL WORK EXCEPT THOSE PORTIONS TO BE FIELD WELDED, OR TO RECEIVE FIRE PROOFING. PRIMER PAINT SHALL BE FABRICATORS STANDARD AND SURFACE PREPARATION SHALL COMPLY WITH SSPC SP2 & SP3, UNLESS NOTED OTHERWISE.

PROVIDE SHOP DRAWINGS FOR APPROVAL.

ADAMS HILL CENTER
LAKE OTIS BOULEVARD

Gordon Thompson Architect
711 M STREET, SUITE 101 ANCHORAGE, ALASKA 99501 (907)279-2554

ORIGINAL FULL SIZE DRAWINGS ARE 22"x34". 11x17 SIZE DRAWINGS ARE HALF SCALE.

DRAWN	RLW
CHECKED	NF
DATE	8-25-15
JOB NO.	14-081
SHEET NO.	S0.1
OF:	NINE

STRUCTURAL NOTES CONTINUED:

7. STRUCTURAL GRADE LUMBER: STRUCTURAL GRADE LUMBER SHALL COMPLY WITH THE NATIONAL LUMBER MANUFACTURERS ASSOCIATION "NATIONAL SPECIFICATIONS FOR STRESS GRADE LUMBER". LUMBER SHALL BE HEM–FIR, NO. 2 OR BETTER UNLESS OTHERWISE NOTED. ALL LUMBER EXPOSED TO WEATHER OR IN CONTACT WITH SOIL, MASONRY, OR CONCRETE SHALL BE PRESSURE TREATED WITH AN APPROVED WOOD PRESERVATIVE. ALL NAILING TO BE PER I.B.C. TABLE 2304.9.1 UNLESS OTHERWISE SHOWN. ALL FASTENERS EXPOSED TO THE WEATHER SHALL BE GALVANIZED.

8. PLYWOOD PANELS SHALL BE STAMPED WITH APA GRADE TRADEMARK OF THE AMERICAN PLYWOOD ASSOCIATION AND SHALL MEET U.S. PRODUCT STANDARDS P.S. 1–09 OR PS 2–10. ALL PLYWOOD SHALL HAVE EXTERIOR GLUE.

   WALL SHEATHING SHALL BE APA 15/32 INCH CD, EXPOSURE 1, PANEL IDENTIFICATION INDEX 24/0. ALL PANEL EDGES TO BE SUPPORTED ON 2 INCH NOMINAL FRAMING. REFER TO SHEAR WALL SCHEDULE FOR NAILING REQUIREMENT FOR ALL WALLS MARKED WITH A SHEAR WALL TYPE. OTHER PLYWOOD WALL SHEATHING SHALL BE NAILED WITH 10D NAILS AT 6 INCH C–C ALL PANEL EDGES AND 12 INCH C–C AT INTERMEDIATE SUPPORTS. ALL NAILS IN EXTERIOR WALL SHALL BE GALVANIZED UNLESS OTHERWISE NOTED.

   ROOF SHEATHING SHALL BE APA 5/8 INCH CD, EXPOSURE 1, PANEL IDENTIFICATION INDEX 40/20. INSTALL FACE GRAIN PERPENDICULAR TO SUPPORTS. STAGGER END PANEL JOINTS. NAIL AT 6 INCH C–C ALL SUPPORTED PANEL EDGES; 4 INCHES C–C TO BLOCKING OVER WALLS; AND AT 12 INCH C–C AT INTERMEDIATE SUPPORTS UNLESS OTHERWISE NOTED ON THE DRAWINGS. ALL NAILS SHALL BE 10D COMMON NAILS.

9. GLUED LAMINATED TIMBERS: GLUED LAMINATED TIMBERS SHALL COMPLY WITH ANSI/AITC A190.1. COMBINATIONS SHALL BE Fb = 2,400 PSI. (V–4) SHIPPING PROTECTION SHALL CONFORM TO AITC STANDARD 111. CAMBER SHALL BE 1–1/2 TIMES DEAD LOAD DEFLECTION.

10. ALL ROOF JOISTS SHALL BE OF THE SIZE, TYPE AND SPACING INDICATED ON THE DRAWINGS AND MANUFACTURED BY BOISE CASCADE, OR EQUAL. PROVIDE BRIDGING AND BLOCKING PER MANUFACTURER. PROVIDE SHOP DRAWINGS WITH DETAILS FOR APPROVAL.

11. LAMINATED VENEER LUMBER: FRAMING MEMBERS INDICATED AS ML OR LVL ARE LAMINATED VENEER LUMBER AS MANUFACTURED BY BOISI CASCADE, TRUS JOIST MACMILLAN OR EQUAL. LAMINATED VENEER LUMBER SHALL BE OF DOUGLAS FIR VENEERS WITH EXTERIOR ADHESIVES WHICH COMPLY WITH ASTM D2559. MULTIPLE MEMBERS FORMING BEAMS SHALL BE SIDE NAILED WITH (2) ROWS OF 16D NAILS AT 1'–0" OC.

12. SHOP DRAWINGS: THE CONTRACTOR SHALL REVIEW, STAMP WITH HIS APPROVAL, DATE AND SIGN ALL SHOP DRAWINGS REQUIRED BY THE CONTRACT DRAWINGS PRIOR TO SUBMITTAL TO THE ENGINEER. AT THE TIME OF SUBMISSION, THE CONTRACTOR SHALL INFORM THE ENGINEER IN WRITING OF ANY DEVIATION IN THE SHOP DRAWINGS FROM THE REQUIREMENTS OF THE CONTRACT DRAWINGS.

13. SPECIAL INSPECTIONS: SPECIAL INSPECTIONS AND STRUCTURAL OBSERVATIONS ARE REQUIRED AS APPLICABLE AND IN ACCORDANCE WITH IBC CHAPTER 17. SEE SHEET S0.2 AND S0.3 FOR THE QUALITY ASSURANCE PLAN REQUIREMENTS.

14. DEFERRED SUBMITTALS:
    - STOREFRONT / GLAZING.
    - ROOFTOP MECHANICAL ATTACHMENTS.
    - ROOFING ATTACHMENT SYSTEM.

QUALITY ASSURANCE PLAN

STATEMENT OF SPECIAL INSPECTIONS

SPECIAL INSPECTION AND TESTING ARE REQUIRED BY IBC SECTION 1704, 1707 AND 1708, AND ARE IDENTIFIED IN THE FOLLOWING TABLES. THESE INSPECTIONS INCLUDE ALL WIND AND SEISMIC RESISTING COMPONENTS. ALL SUBMITTALS AND SPECIAL INSPECTION SHALL MEET THE REQUIREMENTS OF AISC 341–10 CHAPTER J.

OWNER RESPONSIBILITY

AS PART OF THE QUALITY ASSURANCE PLAN, THE OWNER SHALL EMPLOY ONE OR MORE SPECIAL INSPECTORS TO PROVIDE INSPECTIONS DURING CONSTRUCTION ON THE TYPES OF WORK LISTED AS REQUIRED IN IBC SECTION 1704. THE SPECIAL INSPECTOR SHALL BE A QUALIFIED PERSON WHO SHALL DEMONSTRATE COMPETENCE, TO THE SATISFACTION OF THE BUILDING OFFICIAL, FOR INSPECTION OF THE PARTICULAR TYPE OF CONSTRUCTION OR OPERATION REQUIRING SPECIAL INSPECTION. THESE INSPECTIONS ARE IN ADDITION TO THE INSPECTIONS SPECIFIED IN IBC SECTION 109. SPECIAL INSPECTORS SHALL KEEP RECORDS OF INSPECTIONS. THE SPECIAL INSPECTOR SHALL FURNISH INSPECTION REPORTS TO THE CONTRACTOR, TO THE BUILDING OFFICIAL, AND TO THE REGISTERED DESIGN PROFESSIONAL IN RESPONSIBLE CHARGE. REPORTS SHALL INDICATE THAT WORK INSPECTED WAS DONE IN CONFORMANCE TO APPROVED CONSTRUCTION DOCUMENTS. DISCREPANCIES SHALL BE BROUGHT TO THE IMMEDIATE ATTENTION OF THE CONTRACTOR FOR CORRECTION.

CONTRACTOR RESPONSIBILITY

THE CONTRACTOR RESPONSIBLE FOR THE CONSTRUCTION OF A MAIN WIND– OR SEISMIC–FORCE–RESISTING SYSTEM, DESIGNATED SEISMIC SYSTEM OR A WIND– OR SEISMIC–RESISTING COMPONENT LISTED IN THE STATEMENT OF SPECIAL INSPECTIONS SHALL SUBMIT A WRITTEN STATEMENT OF RESPONSIBILITY TO THE BUILDING OFFICIAL AND THE OWNER PRIOR TO THE COMMENCEMENT OF WORK ON THE SYSTEM OR COMPONENT. THE CONTRACTOR SHALL PROVIDE NOTICE TO THE SPECIAL INSPECTOR PRIOR TO COMPLETION OF WORK REQUIRING SPECIAL INSPECTION. THE CONTRACTOR SHALL MAINTAIN THE REPORTS ON SITE FOR REVIEW. ALL DISCREPANCIES SHALL BE BROUGHT TO THE IMMEDIATE ATTENTION OF THE CONTRACTOR FOR CORRECTION AND IF NOT CORRECTED, TO THE ATTENTION OF THE ENGINEER OF RECORD AND THE BUILDING OFFICIAL.

ALL REQUIRED CERTIFICATES OF COMPLIANCE SHALL BE SUBMITTED TO THE OWNER AND THE BUILDING OFFICIAL.

NOTES:

1. TABLE BELOW IS MODIFIED FOR PROJECT SPECIFIC CONDITIONS AND REQUIREMENTS.
2. ITEMS MARKED WITH AN **X** ARE REQUIRED INSPECTIONS EITHER CONTINUOUS OR PERIODIC AS INDICATED.
3. CONTINUOUS SPECIAL INSPECTION **-** CONTINUOUS SPECIAL INSPECTION IS THE FULL TIME OBSERVATION OF THE WORK BY THE SPECIAL INSPECTOR PRESENT IN THE WORK AREA WHENEVER WORK IS BEING PERFORMED. CONTINUOUS SPECIAL INSPECTION SHALL BE PERFORMED WHERE SPECIFIED FOR TIMES AS SHOWN IN THE TABLE BELOW.
4. PERIODIC SPECIAL INSPECTION **-** PERIODIC SPECIAL INSPECTION IS THE INTERMITTENT OBSERVATION OF THE WORK BY A SPECIAL INSPECTOR PRESENT IN THE WORK AREA WHILE WORK IS BEING PERFORMED. THE INTERMITTENT OBSERVATION PERIODS SHALL BE AT TIMES OF SIGNIFICANT WORK AND SHALL BE RECURRENT OVER THE COMPLETE WORK PERIOD. PERIODIC SPECIAL INSPECTION SHALL BE PERFORMED WHERE SPECIFIED FOR ITEMS AS SHOWN IN THE TABLE BELOW.

IBC CHAPTER 1704.7 REQUIRED VERIFICATION AND INSPECTION OF SOILS [1] [2]

VERIFICATION AND INSPECTION	CONT. INSP.	PER. INS.	REFERENCED STANDARD	IBC REFERENCE	REMARKS
1. Verify materials below footings are adequate to achieve design bearing capacity.	–	X		1704.7	Visual
2. Verify excavations are extended to proper depth and have reached proper material.	–	X		1704.7	Visual
3. Perform classification and testing of controlled fill materials.	–	X		1704.7	Visual
4. Verify use of proper materials, densities and lift thicknesses during placement and compaction of controlled fill.	–	X		1704.7	Visual
5. Prior to placement of controlled fill, observe subgrade and verify that site has been prepared properly.	–	X		1704.7	Visual

IBC TABLE 1704.4 REQUIRED VERIFICATION AND INSPECTION OF CONCRETE CONSTRUCTION [1] [2]

VERIFICATION AND INSPECTION	CONT. INSP.	PER. INS.	REFERENCED STANDARD	IBC REFERENCE	REMARKS
1. Inspection of reinforcing steel, including prestressing tendons, and placement.	–	X	ACI 318: 3.5, 7.1–7.7	1913.4	
2. Inspection of reinforcing steel welding in accordance with Table 1704.3, Item 5b.	–	–	AWS D1.4 ACI 318: 3.5.2	–	
3. Inspect bolts to be installed in concrete prior to and during placement of concrete where allowable loads have increased.	X	–	–	1911.5	
4. Post installed concrete anchors.	–	X	ACI 318: 3.8.6, 8.1.3, 21.2.8	1912.1	Per manufacturer
5. Verifying use of required design mix.	–	X	ACI 318: Ch. 4, 5.2–5.4	1904.2.2, 1913.2, 1913.3	
6. At the time fresh concrete is sampled to fabricate specimens for strength tests, perform slump and air content tests, and determine the temperature of the concrete.	X	–	ASM C 172 ASTM C 31 ACI 318: 5.6, 5.8	1913.1	Strength test: One set per each day or 150 cubic yards
7. Inspection of concrete and shotcrete placement for proper application techniques.	X	–	ACI 318: 5.9, 5.10	1913.6, 1913.7, 1913.8	
8. Inspection for maintenance of specified curing temperature and techniques.	–	–	ACI 318: Ch. 16	–	
9. Verification of in–situ concrete strength, prior to stressing of tendons in posttensioned concrete and prior to removal of shores and forms from beams and structural slabs.	–	–	ACI 318: 6.2	–	
10. Inspect form work for shape, location and dimensions of concrete member being formed.	–	X	ACI 318: 6.1.1	–	

ADAMS HILL CENTER
LAKE OTIS BOULEVARD

Gordon Thompson Architect
711 M STREET, SUITE 101 ANCHORAGE, ALASKA 99501 (907)279-2554

ORIGINAL FULL SIZE DRAWINGS ARE 22"x34". 11x17 SIZE DRAWINGS ARE HALF SCALE.

DRAWN	RLW
CHECKED	NF
DATE	8·25·15
JOB NO.	14-081
SHEET NO.	S0.2
OF:	NINE

QUALITY ASSURANCE PLAN CONTINUED.

IBC TABLE 1704.3 REQUIRED VERIFICATION AND INSPECTION OF STEEL CONSTRUCTION [1] [2]					
VERIFICATION AND INSPECTION	CONT. INSP.	PER. INS.	REFERENCED STANDARD	IBC REFERENCE	REMARKS
1. Material verification of high–strength bolts, nuts and washers:					
a. Identification markings to conform to ASTM standards specified in the approved construction documents.	–	X	Applicable ASTM material specifications: AISC 360, Section A3.3	–	Foundation anchor rods. Bolted connections
b. Manufacturer's certificate of compliance required.	–	–	–	–	
2. Inspection of high–strength bolting:					
a. Bearing–type connections.	–	X	AISC 360, Section M2.5	1704.3.3	Snug tight with twist off bolts. Visual only.
b. Moment frame connections.	–	–			
3. Material verification of structural steel and cold formed deck:					
a. Identification markings to conform to ASTM standards specified in the approved construction documents.	–	–	ASTM A 6 or ASTM A 568		
b. Manufacturer's certificate of compliance required.	–	–	ASTM A 6 or ASTM A 568		
4. Material verification of weld filler materials:					
a. Identification markings to conform to AWS specified in the approved construction documents.	–	X	AISC 360, Section A3.5	–	
b. Manufacturer's certificate of compliance required.	–	–	–	–	
5. Inspection of welding:					
a. Structural steel and cold formed steel deck:					All shop welding to be preformed and inspected by AISC certified shop
1) Complete & partial penetration groove welds.	–	–	AWS D1.1	1704.3.1	
2) Multipass fillet welds.	–	–			
3) Single–pass fillet welds > 5/16", plug and slot welds	–	–			
4) Single–pass fillet welds ≤ 5/16"	–	X			Visual only.
5) Floor and roof deck welds.	–	–	AWS D1.3	–	Visual only.

IBC CHAPTER 17 REQUIRED VERIFICATION AND INSPECTION OF OTHER CONSTRUCTION [1] [2]					
VERIFICATION AND INSPECTION	CONT. INSP.	PER. INS.	REFERENCED STANDARD	IBC REFERENCE	REMARKS
1. Structural Wood	–	X		1707.3	Wall sheathing, Roof sheathing
2. Cold Formed Steel Framing	–	–		1707.4	Exterior curtain wall
3. Pier Foundations, Pile Foundations	–	–		1704.8 1704.9	
4. Storage Racks and Access Floors	–	–		1707.5	
5. Architectural Components	–	X		1707.6 1705.4.2	Exterior Walls Suspended Ceilings Roof Cladding
6. Mechanical and Electrical Components	–	X		1707.7	HVAC attachments
7. Sprayed Fire Resistant Materials	–	–		1704.12	
8. Intumescent Fire Resistant Coatings	–	–		1704.13	
9. Exterior Insulation and Finish System	–	X		1704.14	See architect
10. Special Cases	–	–		1704.15	

ADAMS HILL CENTER
LAKE OTIS BOULEVARD

Gordon Thompson Architect
711 M STREET, SUITE 101 ANCHORAGE, ALASKA 99501 (907)279-2554

ORIGINAL FULL SIZE DRAWINGS ARE 22"x34". 11x17 SIZE DRAWINGS ARE HALF SCALE.

DRAWN RLW
CHECKED NF
DATE 8-25-15
JOB NO. 14-081
SHEET NO. S0.3
OF: NINE

HEADER SCHEDULE

MARK	SIZE	BEARING STUDS	THRU STUDS
H-1	(2) 2x12	(1) 2x6	(1) 2x6
H-2	3 1/8"x12" GLB	–	SEE 3/S2.3

1. ALL HEADERS ARE HEM FIR #1 OR DF #2 OR GLB AS NOTED.
2. ALL HEADERS ARE AS SHOWN.
   PROVIDE (1) BEARING STUD AND (1) THROUGH STUD SPANS UP TO 4'-0".
   PROVIDE (2) BEARING STUDS AND (2) THROUGH STUD SPANS UP TO 7'-0" UNLESS OTHERWISE SHOWN.
3. AT INTERIOR WALLS VERTICAL STRAPS EACH SIDE OF SUPPORT MAY BE USED TO REPLACE THRU STUDS.
4. NO THRU STUDS REQUIRED WHERE BEAM OR HEADER END MEETS ADJOINING WALL.

HOLDOWN SCHEDULE

WALL MARK	HOLDOWN	STUDS MIN	FASTENER	ANCHOR	MIN. EMBED.	DETAIL
⟨5⟩	HDU5-SDS2.5	(2) 2x6	SEE MFR.	5/8" DIA ALL THREAD	40"	1/S0.4
⟨11⟩	HDU11-SDS2.5	DF 6x6	SEE MFR.	1" DIA ALL THREAD	40"	1/S0.4
⟨C⟩	HSS 5x5x1/4	–	–	(2) 3/4" DIA ALL THREAD	20"	2/S2.3

1. HOLDOWN LOCATIONS SHOWN ARE APPROXIMATE, REFER TO ARCHITECT FOR OPENING LOCATIONS. FASTENERS SHALL BE ATTACHED TO THE STUDS OR BOUNDARY MEMBER AT THE SIDE OF OPENING ABOVE.
2. ALL HOLDOWN BOLTS SHALL BE GALVANIZED WITH DOUBLE NUT AND WASHER BOTTOM.

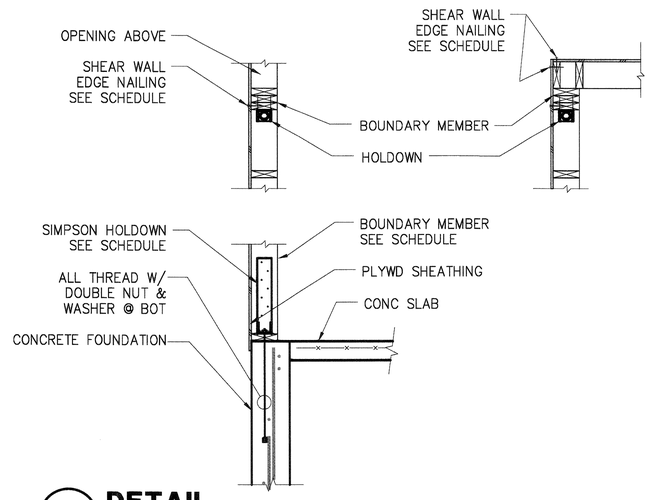

1 DETAIL

SCALE: 3/4" = 1'-0"

SHEAR WALL SCHEDULE

MARK	SHEATHING	EDGE FASTENER	P-P FASTENER	ANCH. BOLT
△6	15/32 CDX	10d @ 6" O.C.	16d @ 8" OC.	5/8"ø x12" @ 2'-8"
△4	15/32 CDX	10d @ 4" O.C.	16d @ 4" OC.	5/8"ø x12" @ 1'-4"
△44	(2) 15/32 CDX	10d @ 4" O.C.	16d @ 4" OC.	5/8"ø x12" @ 1'-0"

NOTES FOR TYP SHEAR WALL.

1. SHEAR WALL SCHEDULE INDICATES SHEATHING AND NAILING REQUIREMENTS FULL LENGTH OF WALL OR GRID. SEE FRAMING PLANS FOR WALL LOCATIONS BELOW THAT LEVEL. SHEAR WALL NAILING SHOWN IS FOR EDGES AND ALL HOLDOWN FRAMING MEMBERS. NAIL OTHER FIELD MEMBERS AT 12 INCHES ON CENTER.
2. ALL FRAMING SHALL BE HEM FIR. NO. 2 MIN AT 16" OC. UNO.
3. ALL SHEATHING SHALL BE 15/32 CDX PLYWOOD WITH ALL EDGES BLOCKED
4. SEE PLAN AND HOLDOWN SCHEDULE FOR END OF WALL AND WALL OPENING CONDITIONS.
5. ALL ANCHOR BOLTS SHALL BE GALVANIZED WITH A 3"x3"x1/4 PLATE WASHER.
6. VERTICAL STUDS AT PANEL JOINTS AND BOTTOM PLATE SHALL BE 4x6 MIN OR (2) STUDS NAILED TOGETHER WITH (2) ROWS 16d @ 6" OC FOR TYPE △3 & △4 WALLS.
7. VERTICAL STUDS AT PANEL JOINTS AND BOTTOM PLATE SHALL BE 4x6 MIN FOR TYPE △44 WALLS.
8. TOP PLATES SHALL BE 2x6 VERSA STUDS AND CONNECT THE TOP VERSA STUD TOP PLATE JOINT WITH AN MST 48 STRAP AT ALL △44 WALLS.

STATE OF ALASKA 49TH
Nelson M. Franklin
NO. 3659-E
8-25-15
REGISTERED PROFESSIONAL ENGINEER

ADAMS HILL CENTER
LAKE OTIS BOULEVARD

Gordon Thompson Architect
711 M STREET, SUITE 101 ANCHORAGE, ALASKA 99501 (907)279-2554

DRAWN RLW
CHECKED NF
DATE 8-25-15
JOB NO. 14-081
SHEET NO. **S0.4**
OF: NINE

ORIGINAL FULL SIZE DRAWINGS ARE 22"x34". 11x17 SIZE DRAWINGS ARE HALF SCALE.

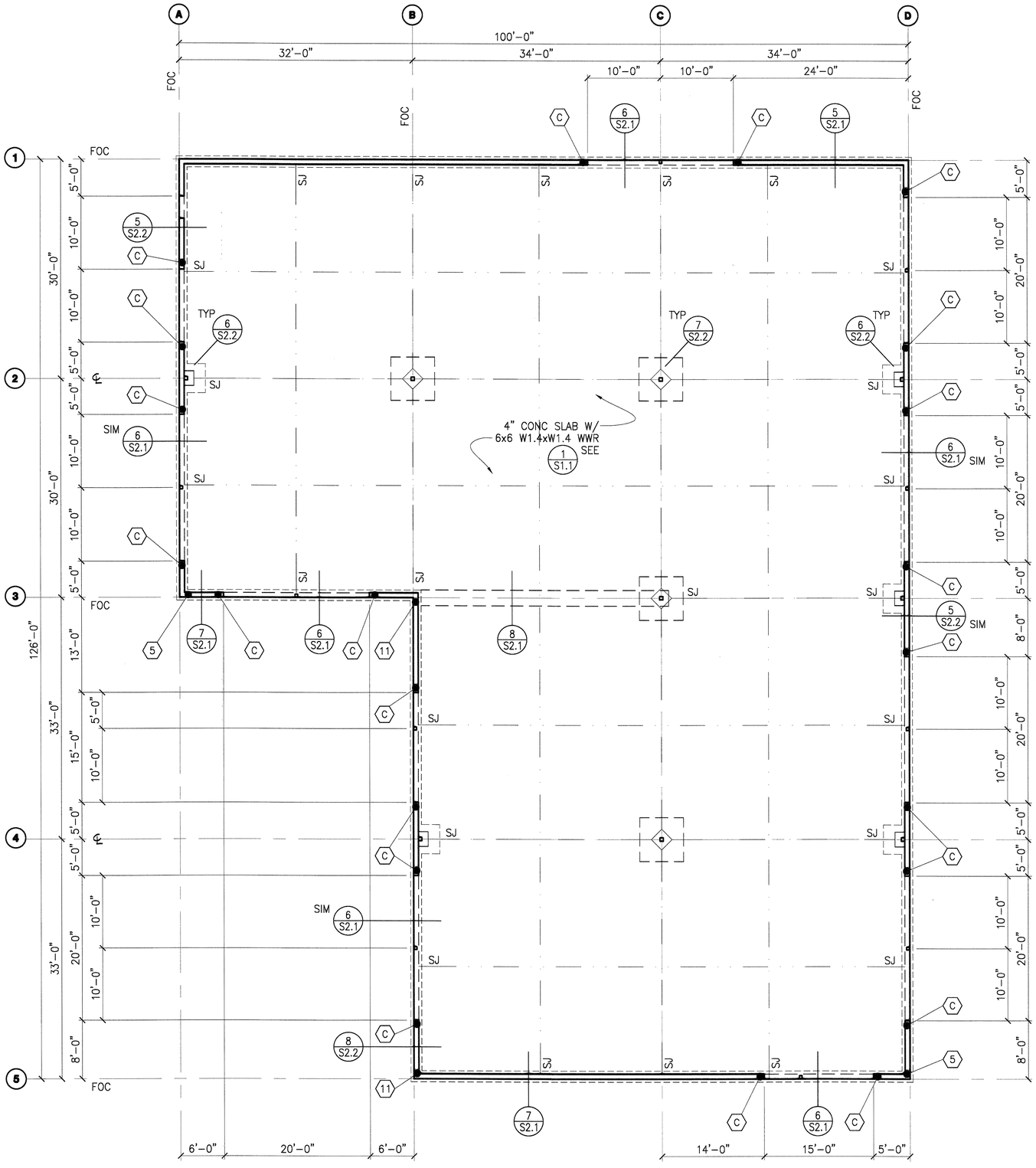

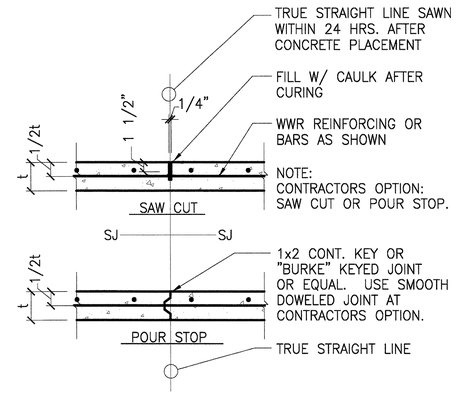

1 DETAIL

SCALE: 3/4" = 1'-0"

FOUNDATION PLAN

FOC – FACE OF CONC

(X) – INDICATES SHEARWALL HOLDOWN, SEE SCHEDULE

SCALE: 1/8" = 1'-0"

NORTH

STATE OF ALASKA 49TH
Nelson M. Franklin
NO. 3659-E
8-25-15
REGISTERED PROFESSIONAL ENGINEER

ADAMS HILL CENTER
LAKE OTIS BOULEVARD

Gordon Thompson Architect
711 M STREET, SUITE 101 ANCHORAGE, ALASKA 99501 (907)279-2554

DRAWN	RLW
CHECKED	NF
DATE	8-25-15
JOB NO.	14-081
SHEET NO.	S1.1
OF:	NINE

ORIGINAL FULL SIZE DRAWINGS ARE 22"x34". 11x17 SIZE DRAWINGS ARE HALF SCALE.

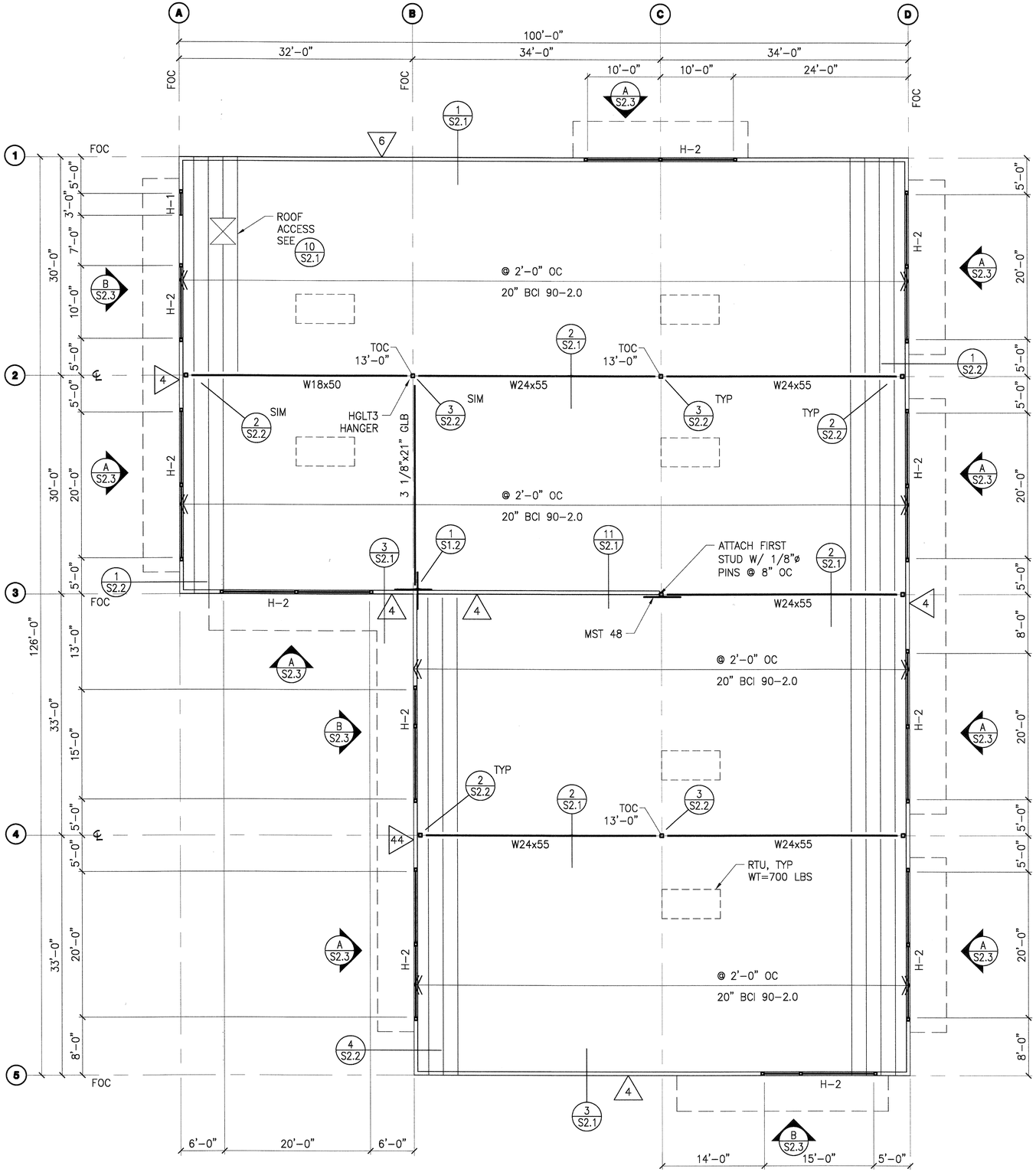

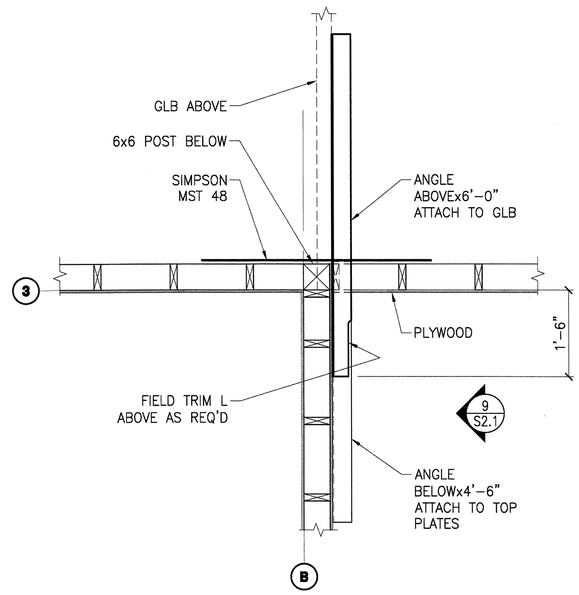

1 DETAIL (PLAN VIEW)

SCALE: 3/4" = 1'-0"

BEAM CONNECTION BOLT SCHEDULE

SIZE	CONN PLATE	LENGTH MIN.	NUMBER OF BOLTS	COMMENTS
W 18	PL 5/16" x 3 1/2" x L	15	(5) 3/4"ø	SEE 2/S2.2 & 3/S2.2
W 21-24	PL 5/16" x 3 1/2" x L	18	(6) 3/4"ø	

2 DETAIL

SCALE: 3/4" = 1'-0"

NOTE:
CO-ORDINATE LOCATION OF ROOFTOP RTU W/ MECHANICAL. PROVIDE ADDITIONAL JOISTS OR REINFORCING AT ROOF PENETRATIONS AS REQUIRED.

ROOF FRAMING PLAN

SCALE: 1/8" = 1'-0"

FOC - FACE OF CONC / FACE OF STUD

(X) - INDICATES SHEARWALL, SEE SCHEDULE

TOC - TOP OF COL. 13'-8 1/2" TYP UNO.

NORTH

STATE OF ALASKA
49TH
Nelson M. Franklin
NO. 3659-E
REGISTERED PROFESSIONAL ENGINEER

ADAMS HILL CENTER

LAKE OTIS BOULEVARD

Gordon Thompson Architect
711 M STREET, SUITE 101 ANCHORAGE, ALASKA 99501 (907)279-2554

ORIGINAL FULL SIZE DRAWINGS ARE 22"x34". 11x17 SIZE DRAWINGS ARE HALF SCALE.

DRAWN	RLW
CHECKED	NF
DATE	8-25-15
JOB NO.	14-081
SHEET NO.	S1.2
OF:	NINE

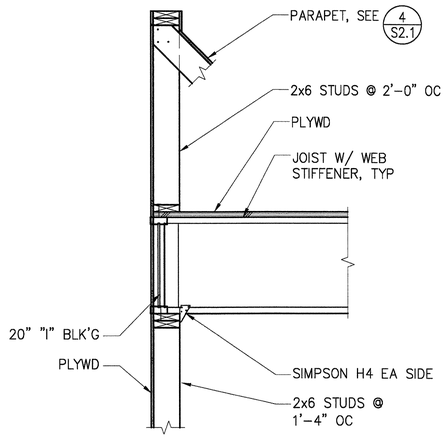

1 DETAIL

SCALE: 3/4" = 1'-0"

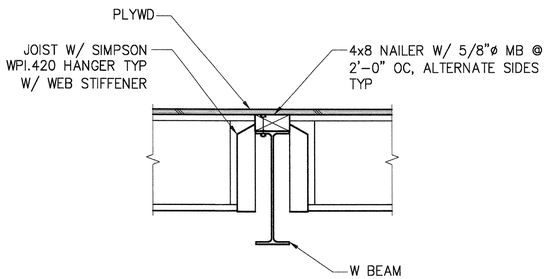

2 DETAIL

SCALE: 3/4" = 1'-0"

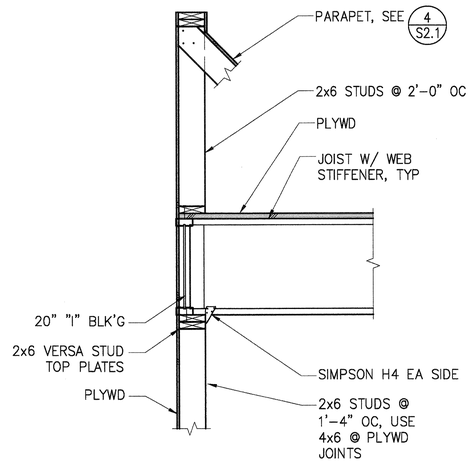

3 DETAIL

SCALE: 3/4" = 1'-0"

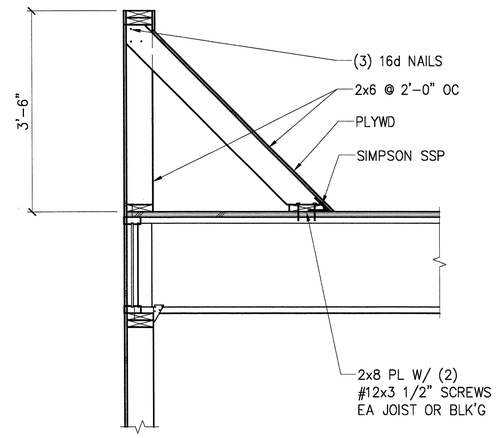

4 DETAIL

SCALE: 3/4" = 1'-0"

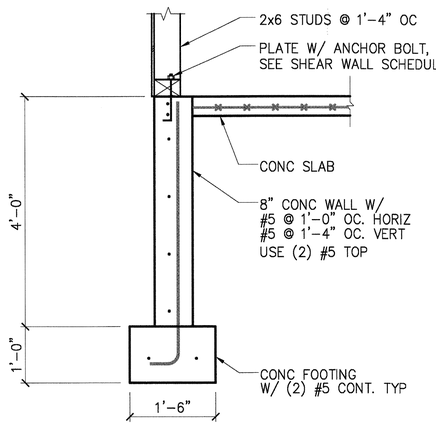

5 DETAIL

SCALE: 3/4" = 1'-0"

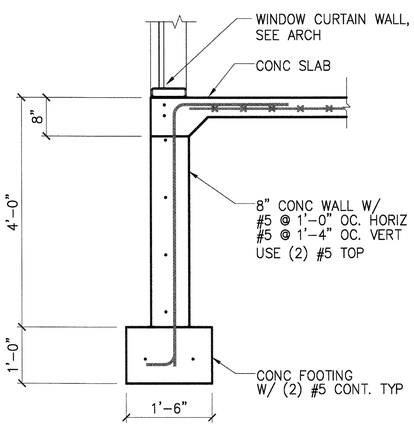

6 DETAIL

SCALE: 3/4" = 1'-0"

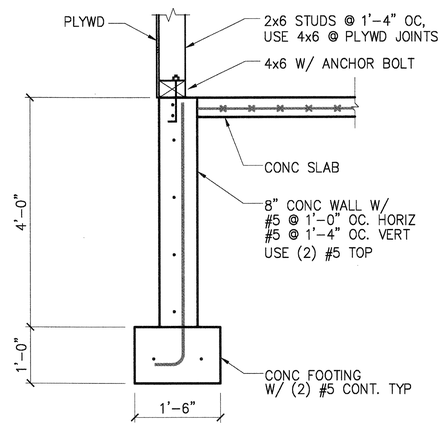

7 DETAIL

SCALE: 3/4" = 1'-0"

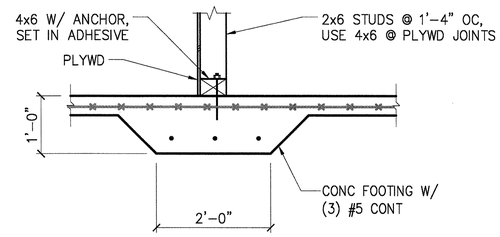

8 DETAIL

SCALE: 3/4" = 1'-0"

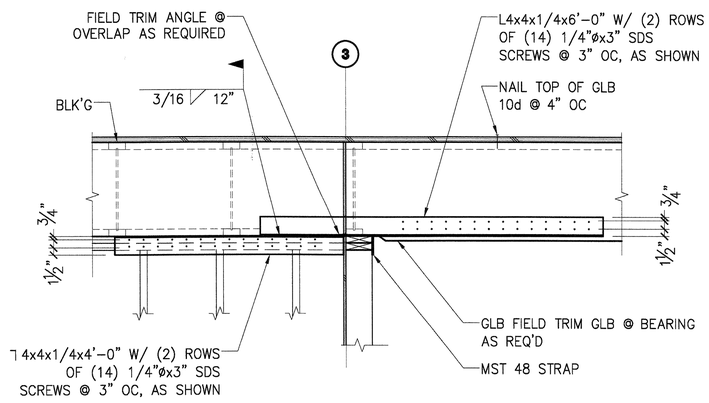

9 DETAIL

SCALE: 3/4" = 1'-0"

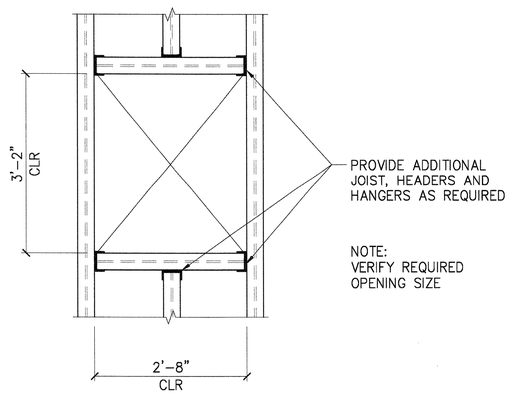

10 DETAIL

SCALE: 3/4" = 1'-0"

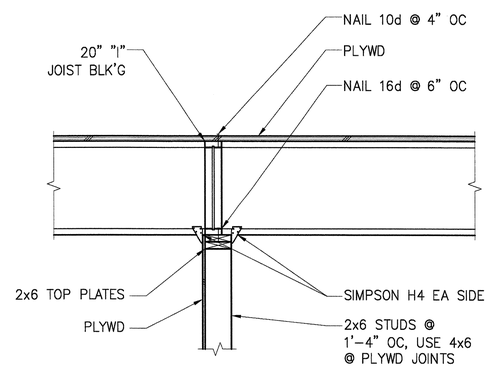

11 DETAIL

SCALE: 3/4" = 1'-0"

STATE OF ALASKA
49TH
Nelson M. Franklin
NO. 3699-E
8-25-15
REGISTERED PROFESSIONAL ENGINEER

ORIGINAL FULL SIZE DRAWINGS ARE 22"x34". 11x17 SIZE DRAWINGS ARE HALF SCALE.

ADAMS HILL CENTER

LAKE OTIS BOULEVARD

Gordon Thompson Architect

711 M STREET, SUITE 101 ANCHORAGE, ALASKA 99501 (907)279-2554

DRAWN	RLW
CHECKED	NF
DATE	8-25-15
JOB NO.	14-081
SHEET NO.	S2.1
OF	NINE

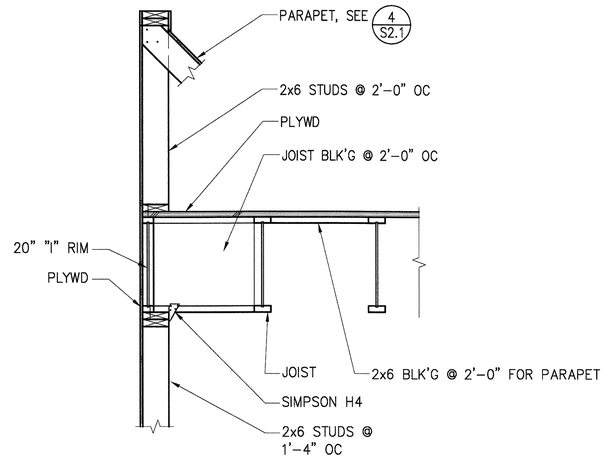

1 DETAIL

SCALE: 3/4" = 1'-0"

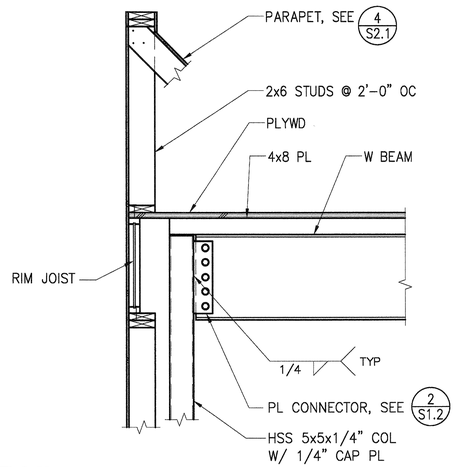

2 DETAIL

SCALE: 3/4" = 1'-0"

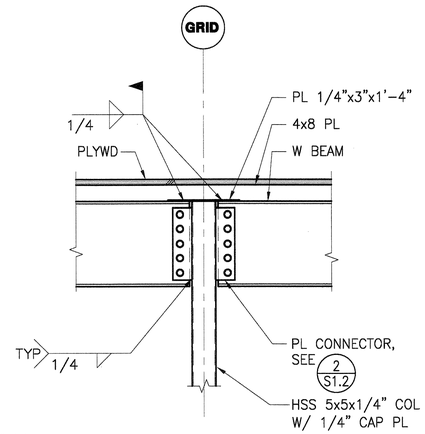

3 DETAIL

SCALE: 3/4" = 1'-0"

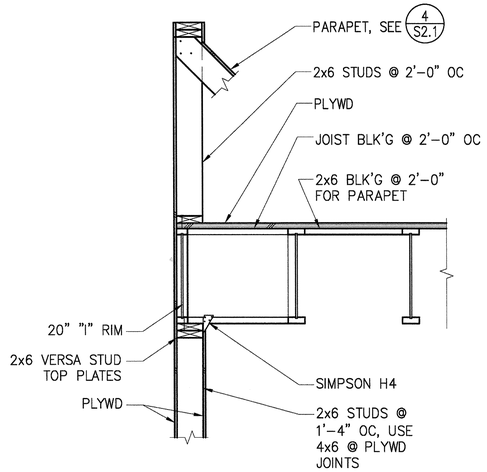

4 DETAIL

SCALE: 3/4" = 1'-0"

5 DETAIL

SCALE: 3/4" = 1'-0"

6 DETAIL

SCALE: 3/4" = 1'-0"

7 DETAIL

SCALE: 3/4" = 1'-0"

8 DETAIL

SCALE: 3/4" = 1'-0"

ADAMS HILL CENTER

LAKE OTIS BOULEVARD

Gordon Thompson Architect
711 M STREET, SUITE 101 ANCHORAGE, ALASKA 99501 (907)279-2554

DRAWN	RLW
CHECKED	NF
DATE	8-25-15
JOB NO.	14-081
SHEET NO.	S2.2
OF:	NINE

ORIGINAL FULL SIZE DRAWINGS ARE 22"x34". 11x17 SIZE DRAWINGS ARE HALF SCALE.

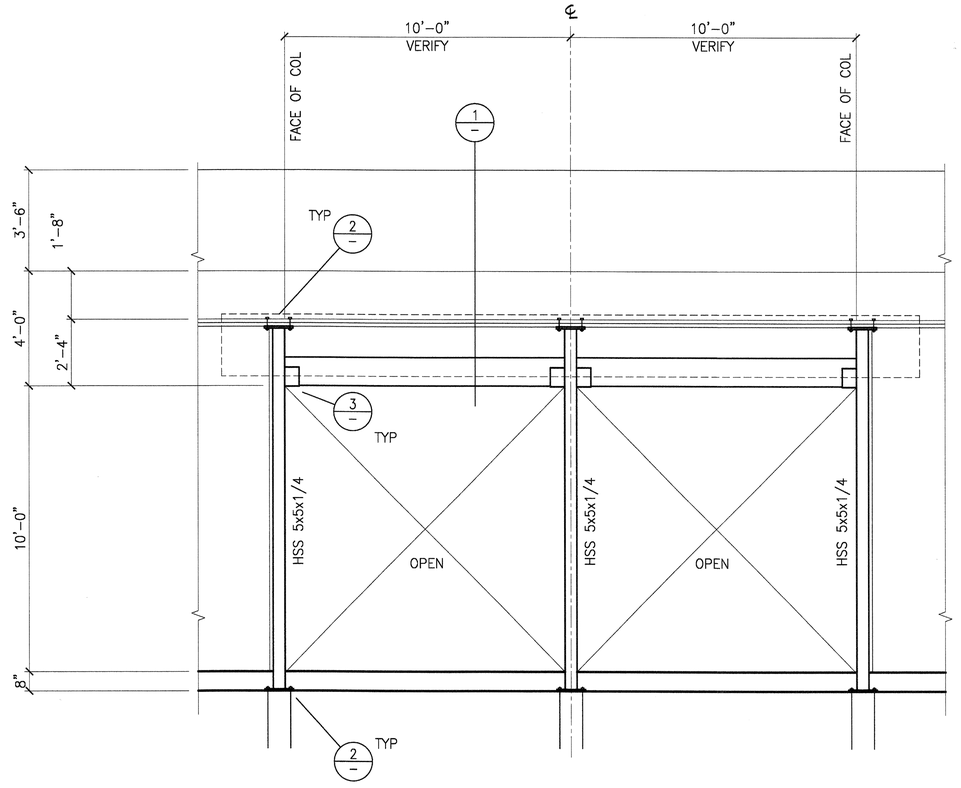

A PARTIAL WALL ELEVATION

SCALE: 3/8" = 1'-0"

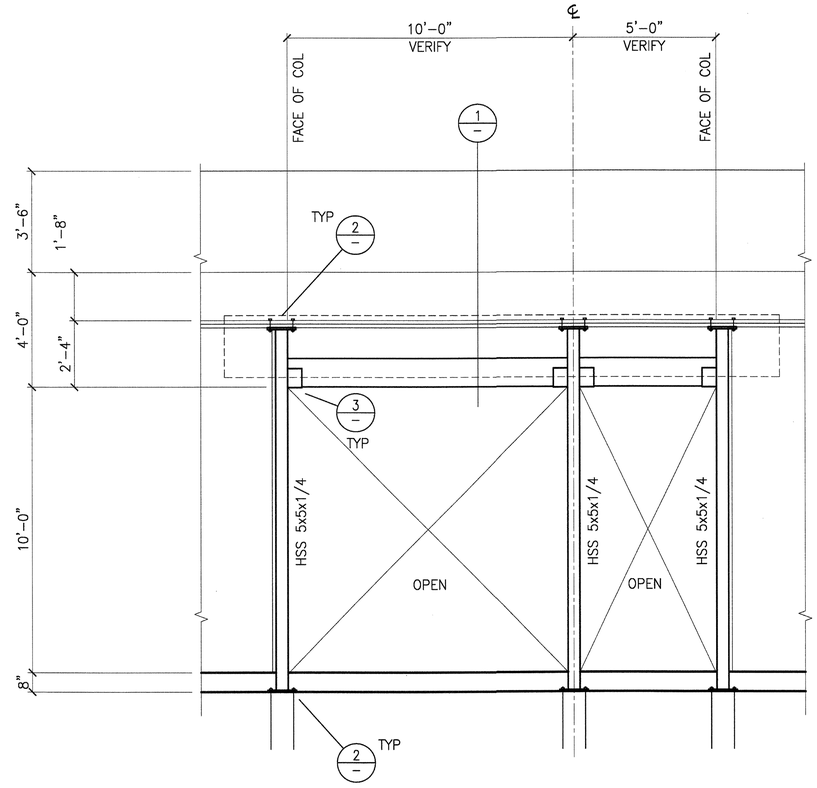

NOTE: SEE ARCH FOR ORIENTATION.

B PARTIAL WALL ELEVATION

SCALE: 3/8" = 1'-0"

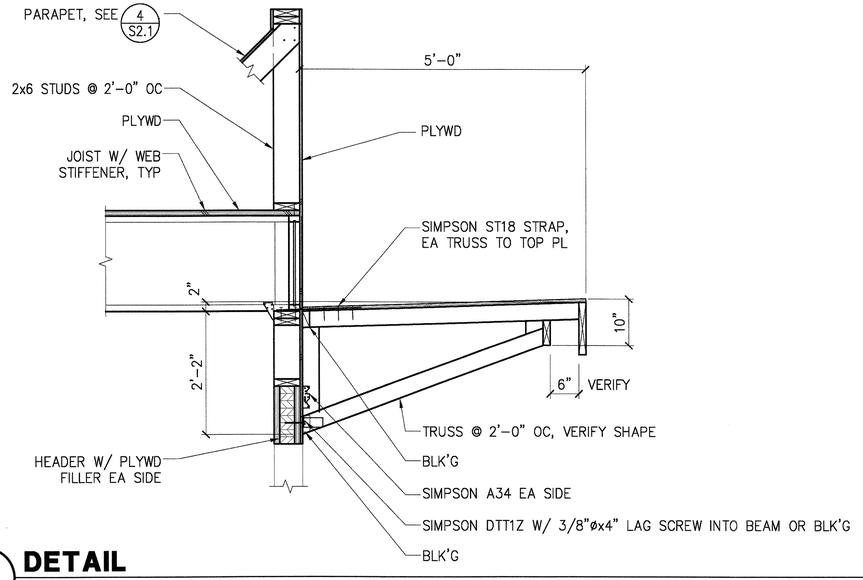

1 DETAIL

SCALE: 3/4" = 1'-0"

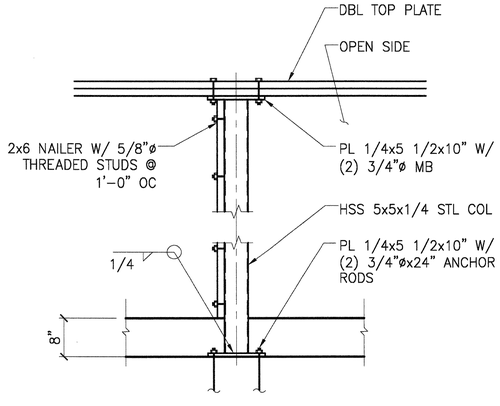

NOTE: USE 4x6 NAILER AT GIRD B

2 DETAIL

SCALE: 3/4" = 1'-0"

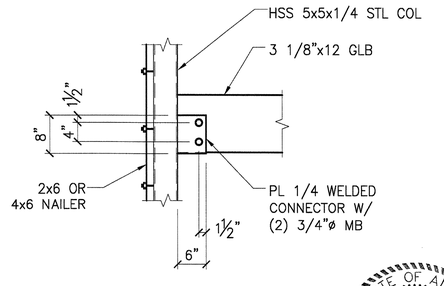

3 DETAIL

SCALE: 3/4" = 1'-0"

ADAMS HILL CENTER

LAKE OTIS BOULEVARD

Gordon Thompson Architect
711 M STREET, SUITE 101 ANCHORAGE, ALASKA 99501 (907)279-2554

ORIGINAL FULL SIZE DRAWINGS ARE 22"x34". 11x17 SIZE DRAWINGS ARE HALF SCALE.

DRAWN	RLW
CHECKED	NF
DATE	8-25-15
JOB NO.	14-081
SHEET NO.	S2.3
OF:	NINE

PIPING LEGEND

- WASTE
- VENT PIPING
- COLD WATER
- HOT WATER
- HOT WATER RECIRCULATED
- XXX — SEE ABBREVIATIONS FOR MEDIA
- PIPE UP
- PIPE DOWN
- TEE UP
- TEE DOWN
- CAP
- UNION
- DIRECTION OF FLOW
- BALL VALVE
- 2–WAY CONTROL VALVE
- 3–WAY CONTROL VALVE
- CHECK VALVE
- BALANCE VALVE
- PRESSURE REDUCING VALVE
- FLEXIBLE PIPING CONNECTOR
- PRESSURE/TEMPERATURE RELIEF VALVE
- GAS ISOLATION VALVE

PIPING LEGEND

- HOSE BIBB
- PUMP
- CLEANOUT
- WATER HAMMER ARRESTOR
- THERMOMETER
- PRESSURE GAUGE W/ ISOLATION COCK
- STRAINER W/ BLOWDOWN
- FLOOR CLEANOUT
- FLOOR DRAIN

LOGIC

- 5 / M2 — DETAIL NUMBER / SHEET LOCATED ON
- 5 / M2 — DIRECTION OF VIEW / SECTION NUMBER / SHEET LOCATED ON
- TAG — SHEET NOTES
- X CONNECTION — NECK SIZE
- CFM — CFM / DIFFUSER OR GRILLE TYPE

DUCTWORK LEGEND

- S — TEMPERATURE SENSOR
- T — THERMOSTAT
- X — THERMOSTAT OR SENSOR WITH TAMPERPROOF GUARD
- SUPPLY AIR UP & DOWN
- RETURN AIR UP & DOWN
- EXHAUST AIR UP & DOWN
- ROUND DUCT UP & DOWN
- VOLUME DAMPER
- M — MOTORIZED CONTROL DAMPER
- SOUND LINED DUCTWORK
- 12/24 — DUCT SIZE (FIRST FIGURE – SIDE SHOWN) (SECOND FIGURE – SIDE NOT SHOWN)
- INSULATED DUCTWORK
- TURNING VANES
- FLEXIBLE DUCT CONNECTION
- $F — FAN SPEED CONTROLLER
- SFD — SMOKE FIRE DAMPER

ABBREVIATIONS

AAV	AUTOMATIC AIR VENT	F	FAHRENHEIT	NTS	NOT TO SCALE
ABV	ABOVE	FC	FORWARD CURVE	OC	ON CENTER
ADA	AMERICAN WITH DISABILITIES ACT GUIDELINES	FCO	FLOOR CLEAN OUT	O/A	OUTSIDE AIR
AD	ACCESS DOOR	FD	FIRE DAMPER	OD	OUTSIDE DAMPER
AFF	ABOVE FINISHED FLOOR	FD–X	FLOOR DRAIN DESIGNATOR	OL	OVERFLOW LEADER
AFG	ABOVE FINISHED GRADE	FIN	FINISHED	P–X	PLUMBING FIXTURE DESIGNATOR
AHAP	AS HIGH AS POSSIBLE	FLA	FULL LOAD AMPS	PD	PRESSURE DROP
AHU–X	AIR HANDLING UNIT DESIGNATOR	FPM	FEET PER MINUTE	P.G.	PROPYLENE GLYCOL
AMPS	AMPERES	FSP	FIRE SPRINKLER PIPING	PH	PHASE
APD	AIR PRESSURE DROP	FT	FEET	PSI	POUND PER SQUARE INCH
ARCH	ARCHITECTURAL	G	GAS	PSIG	POUNDS PER SQUARE INCH GAUGE
AS–X	AIR SEPARATOR DESIGNATOR	GA	GAUGE	R/A	RETURN AIR
B–X	BOILER DESIGNATOR	GAL	GALLONS	RL	RAIN LEADER
BLDG	BUILDING	GALV	GALVANIZED	RZ–X	RADIANT MANIFOLD DESIGNATOR
BDD	BACKDRAFT DAMPER	GPH	GALLONS PER HOUR	RPM	REVOLUTIONS PER MINUTE
BOD	BOTTOM OF DUCT	GPM	GALLONS PER MINUTE	S	SUCTION
BTUH	BRITISH THERMAL UNIT/HOUR	GT–X	GLYCOL TANK DESIGNATOR	S/A	SUPPLY AIR
C/A	COMBUSTION AIR	HB–X	HOSE BIBB DESIGNATOR	SGR	SNOWMELT GLYCOL RETURN
CC–X	COOLING COIL DESIGNATOR	HC–X	HEATING COIL DESIGNATOR	SGS	SNOWMELT GLYCOL SUPPLY
CD	CONDENSATE DRAIN	HD	HEAD	SP	STATIC PRESSURE
CFM	CUBIC FEET PER MINUTE	HGR	HEATING GLYCOL RETURN	SQ	SQUARE
CIRC	CIRCULATING	HGS	HEATING GLYCOL SUPPLY	ST	STEAM PIPING
CLG	CEILING	HOA	HAND–OFF–AUTO	T/A	TRANSFER AIR
CONT	CONTINUED	HP	HORSEPOWER	TOD	TOP OF DUCT
C.O./CO	CLEANOUT	HW	HOT WATER	TSP	TOTAL STATIC PRESSURE
CONN	CONNECTION	HWR	HOT WATER RETURN	T'STAT	THERMOSTAT
CP–X	CIRCULATION PUMP DESIGNATOR	HWS	HOT WATER SUPPLY	TYP	TYPICAL
CUH–X	CABINET UNIT HEATER DESIGNATOR	HX–X	HEAT EXCHANGER DESIGNATOR	UH–X	UNIT HEATER DESIGNATOR
CU	COPPER	IN	INCHES	UPC	UNIFORMED PLUMBING CODE
CU–X	CONDENSING UNIT DESIGNATOR	LAT	LEAVING AIR TEMPERATURE	V	VENT
CW	COLD WATER	LAV	LAVATORY	VAC	VOLT–AC
CWC	COLD WATER CIRCULATED	L	LIQUID	VAV	VARIABLE AIR VOLUME
DB	DECIBLES	LF	LINEAL FEET	VAV–X	VARIABLE AIR VOLUME BOX DESIGNATOR
DEG	DEGREE	LGT	LEAVING GLYCOL TEMPERATURE	VDC	VOLT–DC
DIA	DIAMETER	LHGR	LOW TEMP GLYCOL RETURN	VEL	VELOCITY
DIM	DIMENSION	LHGS	LOW TEMP GLYCOL SUPPLY	VTR	VENT THRU ROOF
DN	DOWN	LWT	LEAVING WATER TEMPERATURE	W	WASTE
DWG	DRAWING	MAX	MAXIMUM	W/	WITH
E/A	EXHAUST AIR	MBH	THOUSAND BTUH	W/O	WITHOUT
EAT	ENTERING AIR TEMPERATURE	MFGR	MANUFACTURER	WC	WATER COLUMN
EFF	EFFICIENCY	MIN	MINIMUM	WCO	WALL CLEAN OUT
EF–X	EXHAUST FAN DESIGNATOR	MOD	MOTOR OPERATED DAMPER	WG	WATER GAUGE
EGT	ENTERING GLYCOL TEMPERATURE	MTD	MOUNTED	WHA	WATER HAMMER ARRESTOR
ENT	ENTERING	NC	NOISE CRITERIA	WH–X	WATER HEATER DESIGNATOR
ESP	EXTERNAL STATIC PRESSURE	N.C.	NORMALLY CLOSED	WPD	WATER PRESSURE DROP
ET–X	EXPANSION TANK DESIGNATOR	NO.	NUMBER	YCO	YARD CLEANOUT
EU–X	EVAPORATIVE UNIT DESIGNATOR	NG	NATURAL GAS		
EXH	EXHAUST	N.O.	NORMALLY OPEN		

ADAMS HILL CENTER
LAKE OTIS BOULEVARD

RSA Engineering, Inc.
MECHANICAL AND ELECTRICAL CONSULTING ENGINEERS
Phone (907) 337-3321
Fax (907) 337-3131

CORE AND SHELL - 100% DESIGN DOCUMENTS

Gordon Thompson Architect
711 M STREET, SUITE 101 ANCHORAGE, ALASKA 99501 (907)279-2554

DRAWN MRB
CHECKED BPP
DATE 25 AUG 15
JOB NO. L5089
SHEET NO. M0.1
OF:

STATE OF ALASKA — BRIAN P. PEKAR — ME-11249 — REGISTERED PROFESSIONAL ENGINEER

SPECIFICATIONS:

PLANS – THE CONTRACTOR SHALL PROVIDE ALL MATERIALS AND LABOR NECESSARY FOR A COMPLETE AND OPERABLE SYSTEM. THE DRAWINGS ARE PARTLY DIAGRAMMATIC, NOT NECESSARILY SHOWING ALL OFFSETS OR EXACT LOCATIONS OF PIPING AND DUCTS UNLESS SPECIFICALLY DIMENSIONED. CONTRACTOR TO COORDINATE PIPING, DUCTWORK, SPRINKLER HEADS AND DIFFUSER LOCATIONS WITH ARCHITECTURAL, STRUCTURAL AND ELECTRICAL PLANS TO AVOID CONFLICT. CODES, ORDINANCES, REGULATIONS, MANUFACTURER'S INSTRUCTIONS OR STANDARDS TAKE PRECEDENCE WHEN THEY ARE MORE STRINGENT OR CONFLICT WITH THE DRAWINGS AND SPECIFICATIONS.

PERMITS – THE CONTRACTOR SHALL SECURE AND PAY FOR ALL NECESSARY PERMITS AND FEES.

CODE – ALL WORK SHALL BE DONE IN ACCORDANCE WITH THE LATEST ADOPTED EDITION OF THE INTERNATIONAL BUILDING CODE (IBC), INTERNATIONAL MECHANICAL CODE (IMC), UNIFORM PLUMBING CODE (UPC), INTERNATIONAL FUEL GAS CODE (IFGC), INTERNATIONAL ENERGY CONSERVATION CODE (IECC) AND NATIONAL ELECTRICAL CODE (NEC) AS AMENDED BY THE MUNICIPALITY OF ANCHORAGE (MOA). SHEET METAL WORK SHALL BE DONE IN ACCORDANCE WITH SMACNA STANDARDS.

EQUIPMENT SUBSTITUTIONS – ALL EQUIPMENT LISTED IS REPRESENTATIVE OF THE STANDARD OF QUALITY AND PERFORMANCE REQUIRED. OR EQUAL SUBSTITUTIONS WILL BE CONSIDERED IF THE SUBSTITUTE CATALOG CUTS ARE SUBMITTED AND ARE SHOWN TO BE EQUAL OR BETTER QUALITY, INCLUDING EFFICIENCY OF PERFORMANCE, SIZE AND WEIGHT.

WARRANTY – ALL WORK PERFORMED UNDER THIS CONTRACT TO BE FREE FROM DEFECTS IN MATERIALS AND WORKMANSHIP FOR A PERIOD OF ONE YEAR FROM ACCEPTANCE. ANY FAULTY MATERIALS OR WORKMANSHIP SHALL BE REPAIRED OR REPLACED TO THE SATISFACTION OF THE OWNER DURING THE GUARANTEE PERIOD.

ELECTRICAL WORK – ALL ELECTRICAL WORK IS TO BE PERFORMED BY A LICENSED ELECTRICIAN. IN ACCORDANCE WITH THE NATIONAL ELECTRICAL CODE, NEC.

SEISMIC RESTRAINT – ALL PIPING, DUCTWORK AND EQUIPMENT INSTALLED UNDER THIS PROJECT SHALL BE SEISMICALLY RATED AND RESTRAINED FOR A SEISMIC EVENT IN ACCORDANCE WITH THE 2009 EDITION OF THE INTERNATIONAL BUILDING CODE AND ASCE 7. THE CONTRACTOR SHALL PROVIDE A DEFERRED SUBMITTAL TO THE MOA PLAN REVIEW DEPARTMENT FOR SEISMIC RESTRAINT DESIGN WITH CALCULATIONS AND SHOP DRAWINGS. SEISMIC RESTRAINT CALCULATIONS AND SHOP DRAWINGS SHALL INCLUDE A STRUCTURAL ENGINEERS STAMP AND SIGNATURE TO MUNICIPALITY OF ANCHORAGE PLAN REVIEW DEPARTMENT FOR ALL PIPING, DUCTWORK AND EQUIPMENT PRIOR TO INSTALLATION. SEISMIC CATEGORY D, COMPONENT IMPORTANCE FACTOR 1.0.

MATERIALS – ALL MATERIALS OTHER THAN OWNER SUPPLIED SHALL BE NEW AND UNUSED, INSTALLED IN ACCORDANCE WITH THE MANUFACTURER'S DIRECTIONS AND IN THE BEST PRACTICE OF THE CRAFT. OBTAIN OWNER'S APPROVAL OF ALL PRODUCTS PRIOR TO ORDERING OR INSTALLING ANY PART OF ANY SYSTEM.

SUBMITTALS – SUBMITTALS SHALL BE IN BOOKLET FORM. THE DATA SHALL BE ARRANGED AND INDEXED UNDER BASIC CATEGORIES. PROVIDE IN ORDER OF MECHANICAL SCHEDULES. PROVIDE MATERIAL AND EQUIPMENT SUBMITTALS CONTAINING A COMPLETE LISTING OF MATERIAL AND EQUIPMENT SHOWN ON THE DRAWINGS. INCLUDE CATALOG NUMBERS, WIRING DIAGRAMS, ACCESSORIES/OPTIONS PROVIDED, ROUGH–IN DIMENSIONS AND PERFORMANCE DATA FOR ALL MATERIAL AND EQUIPMENT.

BALANCE – CONTRACTOR SHALL BALANCE THE AIR AND HYDRONIC SYSTEMS TO THE SATISFACTION OF THE OWNER. AIRFLOWS ARE TO BE BALANCED TO WITHIN 10% OF INDICATED FLOW RATES, PER AABC RECOMMENDED METHODS. COORDINATE WITH CONTROL CONTRACTOR FOR CALIBRATION OF AIRFLOW SENSORS. SUBMIT BALANCE REPORT FOR APPROVAL.

OPERATION AND MAINTENANCE MANUAL – PROVIDE THE OWNER WITH AN OPERATING AND MAINTENANCE MANUAL, TO INCLUDE MANUFACTURER'S SPECIFICATIONS, OPERATING AND MAINTENANCE INSTRUCTIONS, WARRANTY INFORMATION ON EACH PIECE OF EQUIPMENT, AND SCHEMATIC DIAGRAMS OF CONTROL SYSTEMS AS–BUILT, AS WELL AS A SOURCE OF SUPPLY FOR SPARE PARTS AND SERVICE.

RECORD DRAWINGS – PROVIDE ACCURATE PROJECT RECORD DRAWINGS, SHOWN IN RED INK ON FULL SIZE PRINTS, SHOWING ALL CHANGES FROM THE ORIGINAL PLANS MADE DURING INSTALLATION OF THE WORK.

CONTROLS – PACKAGED SNOWMELT CONTROLLER WITH IN–SLAB SENSOR, TEKMAR MODEL A664 OR APPROVED EQUAL, STAND–ALONE CONTROLLER, TO BE INTERLOCKED WITH CIRCULATION PUMPS, 4–WAY VALVE AND BOILERS. PROVIDE TEKMAR 4–WAY VALVE AS INDICATED ON DRAWINGS.

ACCESS – PROVIDE WORKABLE ACCESS TO ALL SERVICEABLE AND/OR OPERABLE EQUIPMENT. PROVIDE ACCESS PANELS OR ACCESS DOORS FOR ALL EQUIPMENT INSTALLED IN CONCEALED LOCATIONS.

TEST AND STARTUP – TEST ALL PLUMBING AND PIPING SYSTEMS IN ACCORDANCE WITH THE UNIFORM PLUMBING CODE. THE DOMESTIC WATER PIPING SYSTEM SHALL BE DISINFECTED IN ACCORDANCE WITH SECTION 609.9 OF THE UPC. TEST ALL FUEL GAS PIPING IN ACCORDANCE WITH THE IFGC. TEST SNOWMELT PIPING WITH 100 PSI AIR PRIOR TO AND DURING CONCRETE POUR. FILL ALL HEATING PIPING WITH CLEANING SOLUTION AND OPERATE FOR SEVERAL HOURS AT NORMAL OPERATING TEMPERATURE BEFORE FLUSHING AND FILLING WITH GLYCOL. PRESSURE TEST REFRIGERANT PIPING SYSTEMS WITH DRY NITROGEN TO 200 PSIG. TEST TO NO LEAKAGE. TEST AND START UP ALL MECHANICAL EQUIPMENT IN ACCORDANCE WITH MANUFACTURER'S RECOMMENDATIONS.

EQUIPMENT INSTALLATION – INSTALL ALL EQUIPMENT WHERE NOTED ON THE DRAWINGS IN ACCORDANCE WITH THE MANUFACTURER'S INSTRUCTIONS. PROVIDE MISCELLANEOUS APPURTENANCES, ACCESSORIES, SUPPORTS AND CONTROL CONNECTIONS REQUIRED FOR COMPLETE AND OPERATING SYSTEMS. MAINTAIN MANUFACTURER'S RECOMMENDED SERVICE CLEARANCES.

IDENTIFICATION – IDENTIFY PIPING TO INDICATE CONTENTS AND FLOW DIRECTION OF EACH PIPE EXPOSED TO VIEW BY PIPE MARKERS OR LABELED SLEEVE IN LETTERS READABLE FROM FLOOR AT LEAST ONCE IN EACH ROOM AND AT INTERVALS OF NOT MORE THAN 20' APART AND ON EACH SIDE OF PARTITION PENETRATIONS. COLORING SCHEME IN ACCORDANCE WITH ANSI A13.1–1981, SETON OPTI–CODE OR EQUAL. LABEL ALL EQUIPMENT WITH HEAT RESISTANT LAMINATED PLASTIC LABELS HAVING ENGRAVED LETTERING 1/2" HIGH.

TRAINING – INSTRUCT THE OWNER'S PERSONNEL IN THE OPERATION, CARE AND MAINTENANCE OF ALL SYSTEMS AND EQUIPMENT PROVIDED. PROVIDE A MINIMUM OF FOUR HOURS OF ON SITE INSTRUCTION TO THE OWNER DESIGNATED PERSONNEL.

PIPING INSULATION – INSULATE ALL HEATING WATER PIPING WITH 1" PRE–FORMED FIBERGLASS INSULATION, COMPLETE WITH FACTORY VAPOR BARRIER AND PLASTIC COVERS FOR FITTINGS. INSULATE ALL DOMESTIC HOT AND COLD WATER PIPING SIZE 1" AND LARGER WITH 1" INSULATION, COMPLETE WITH VAPOR BARRIER JACKET AND PLASTIC COVERS FOR FITTINGS. INSULATE ALL DOMESTIC HOT AND COLD WATER PIPING SIZE 3/4" AND SMALLER WITH 1/2" INSULATION, COMPLETE WITH VAPOR BARRIER JACKET AND PLASTIC COVERS FOR FITTINGS. INSULATE PLUMBING VTR'S DOWN 3' FROM ROOF WITH 1" FIBERGLASS PIPE INSULATION. INSULATE RAINWATER ROOF DRAIN PIPING WITH 1" FIBERGLASS INSULATION, COMPLETE WITH VAPOR SEAL ON ALL PIPING ABOVE GRADE.

WASTE AND VENT PIPING, BELOW GRADE – CAST IRON PIPE: CISPI 301, HUBLESS, SERVICE WEIGHT. FITTINGS: CAST IRON. JOINTS: CISPI 310, NEOPRENE GASKETS AND STAINLESS STEEL CLAMP–AND–SHIELD ASSEMBLIES. COPPER PIPE: ASTM B306, DWV. FITTINGS: ASME B16.3, CAST BRONZE, OR ASME B16.29, WROUGHT COPPER (DWV). JOINTS: ANSI/ASTM B32, DWV. FITTINGS: ASME B16.3, CAST BRONZE, OR ASME B16.29, WROUGHT COPPER (DWV). JOINTS: ANSI/ASTM B32, SOLDER: GRADE 95TA; FLUX: ASTM B813.

WASTE AND VENT PIPING, ABOVE GRADE – ABS PIPE: ASTM D2751. FITTINGS: ABS. JOINTS: ASTM D2235, SOLVENT WELD. CAST IRON PIPE: CISPI 301, HUBLESS, SERVICE WEIGHT. FITTINGS: CAST IRON. JOINTS: CISPI 310, NEOPRENE GASKETS AND STAINLESS STEEL CLAMP–AND–SHIELD ASSEMBLIES. COPPER PIPE: ASTM B306, DWV. FITTINGS: ASME B16.3, CAST BRONZE, OR ASME B16.29, WROUGHT COPPER (DWV). JOINTS: ANSI/ASTM B32, DWV. FITTINGS: ASME B16.3, CAST BRONZE, OR ASME B16.29, WROUGHT COPPER (DWV). JOINTS: ANSI/ASTM B32, SOLDER: GRADE 95TA; FLUX: ASTM B813. ABS PIPE: ASTM D2751. FITTINGS: ABS. JOINTS: ASTM D2235, SOLVENT WELD. NOTE: ABS PIPING IS PROHIBITED IN RETURN AIR PLENUMS.

STORM WATER PIPING, BELOW GRADE – CAST IRON PIPE: CISPI 301, HUBLESS, SERVICE WEIGHT. FITTINGS: CAST IRON. JOINTS: NEOPRENE GASKETS AND STAINLESS STEEL CLAMP–AND–SHIELD ASSEMBLIES.

STORM WATER PIPING, ABOVE GRADE – ABS PIPE: ASTM D2680 OR D2751. FITTINGS: ABS, JOINTS: ASTM D2235, SOLVENT WELD. CAST IRON PIPE: CISPI 301, HUBLESS, SERVICE WEIGHT. FITTINGS: CAST IRON. JOINTS: NEOPRENE GASKETS AND STAINLESS STEEL CLAMP–AND–SHIELD ASSEMBLIES. NOTE: ABS PPING IS PROHIBITED IN RETURN AIR PLENUMS.

DOMESTIC WATER PIPING – COPPER TUBING: ASTM B88, TYPE L, HARD DRAWN. FITTINGS: ASME B16.18 CAST BRONZE OR ASME B16.22 WROUGHT COPPER. JOINTS: ASTM B32, LEAD FREE SOLDER, WATER SOLUBLE FLUX OR VIEGA, PRO PRESS SYSTEM. CPVC TUBING: 1/2" TO 2" FLOWGUARD GOLD CPVC: ASTM D2846, NSF LISTED, SDR 11, FITTINGS: SOLVENT WELDED SOCKET TYPE. 2" AND LARGER CORZAN CPVC: ASTM F441, NSF LISTED, SCHEDULE 80, FITTINGS: ASTM F439 SOLVENT WELDED SOCKET TYPE. PEX TUBING: CROSS–LINKED HIGH DENSITY POLYETHYLENE. TUBING SHALL BE PRODUCED BY USING THE SILANE METHOD OF CROSS–LINKINGAND SHALL MEET THE DIMENSION AND PERFORMANCE SPECIFICATIONS OF ASTM F876/F877 AND CSA B137.5. TUBING SHALL ALSO COMPLY WITH ANSI/NSF 61 AS SUITABLE FOR USE WITH POTABLE WATER.

HEATING PIPING, ABOVE GRADE – COPPER TUBING: ASTM B88, TYPE L, HARD DRAWN. FITTINGS: ANSI/ASME B16.18 CAST BRONZE OF ASME B16.22 WROUGHT COPPER. JOINTS: ASTM B32, SOLDER, GRADE 95TA OR ANSI/AWS A5.8, BCUP SILVER BRAZE; FLUX: ASTM B813. PEX TUBING – PEX TUBING ONLY ALLOWED FOR SNOWMELT/ IN–FLOOR HEATING, PEX TUBING IS NOT ACCEPTABLE FOR HEATING MAINS OR ANY HIGH TEMPERATURE HEATING PIPING. PROVIDE CROSS–LINKED HIGH DENSITY POLYETHYLENE, PEX–AL–PEX. TUBING SHALL MEET THE DIMENSION AND PERFORMANCE SPECIFICATIONS OF ASTM F1281. PROVIDE TUBING WITH OXYGEN BARRIER FOR USE IN HEATING SYSTEMS. POLYPROPYLENE PIPE: PIPE SHALL BE MANUFACTURED FROM A PP–R RESIN MEETING THE SHORT–TERM PROPERTIES AND LONG–TERM STRENGTH REQUIREMENTS OF ASTM F 2389. ALL PIPE SHALL BE MADE IN A THREE LAYER EXTRUSION PROCESS AND CONTAIN A FIBER LAYER (FASER) TO RESTRICT THERMAL EXPANSION. ALL PIPE SHALL COMPLY WITH THE RATED PRESSURE REQUIREMENTS OF ASTM F 2389. FITTINGS SHALL BE MANUFACTURED FROM A PP–R RESIN MEETING THE SHORT–TERM PROPERTIES AND LONG–TERM STRENGTH REQUIREMENTS OF ASTM F 2389. THE PIPE AND FITTINGS SHALL CONTAIN NO REWORK OR RECYCLED MATERIALS EXCEPT THAT GENERATED IN THE MANUFACTURER'S OWN PLANT FROM RESIN OF THE SAME SPECIFICATION FROM THE SAME RAW MATERIAL. THE PIPE AND FITTINGS SHALL BE CLIMATHERM OR CLIMATHERM FASER AVAILABLE FROM AQUATHERM, INC, INSTALLED BY A CERTIFIED CONTRACTOR. POLYPROPYLENE IS PROHIBITED IN RETURN AIR PLENUMS.

NATURAL GAS PIPING ABOVE GRADE – STEEL PIPE: ASTM A53, SCHEDULE 40 BLACK. FITTINGS: ASME B16.3, MALLEABLE IRON, OR ASTM A234/A234M, FORGED STEEL WELDING TYPE. JOINTS: NFPA 54, SCREWED FOR PIPE TWO INCHES AND UNDER AND IF LOW PRESSURE.

NATURAL GAS PIPING BELOW GRADE – MEDIUM DENSITY POLYETHLYENE PIPING APPROVED BY THE PLASTIC PIPE INSTITUTE IN ACCORDANCE WITH ASTM D2513. PROVIDE WITH ANODELESS RISERS AT GROUND LEVEL, AND YELLOW TRACER WIRE IN ACCORDANCE WITH IFGC SECTION 404.

SNOWMELT/RADIANT FLOOR HEATING SYSTEM – COMPLETE AND OPERABLE SYSTEM SHALL INCLUDE MANIFOLDS AND TUBING BY THE SAME MANUFACTURER. TUBING SHALL BE PEX WITH OXYGEN BARRIER AND COMPRESSION FITTINGS. SNOWMELT MANIFOLDS SHALL BE PRE–FABRICATED WITH BRASS HEADERS, ISOLATION AND BALANCE VALVES.

BELOW GRADE SNOWMELT PIPING – PRE–INSULATED PEX PIPING WITH OXYGEN BARRIER AND A MINIMUM R–VALUE OF 5. SNOWMELT TUBING SHALL BE PEX PIPING WITH OXYGEN BARRIER AND COMPRESSION FITTINGS.

GLYCOL – PROVIDE HEAVY DUTY PREMIXED HYDRONIC GRADE PROPYLENE ANTIFREEZE AT A RATE OF 50% WATER TO 50% GLYCOL FOR A –20 DEGREES F PROTECTION OR BETTER. SUPPLY PRE–MIXED GLYCOL–WATER SOLUTION WITH INHIBITORS, DOW FROST HD OR EQUAL. MIXING CONCENTRATED GLYCOL WITH SITE WATER IS NOT ACCEPTABLE. PROVIDE GLYCOL TEST AT FINAL COMPLETION.

ISOLATION VALVES – BRONZE TWO PIECE BODY, FULL PORT, FORGED BRASS, CHROME PLATED BALL, TEFLON SEATS AND STUFFING BOX RING, BLOW–OUT PROOF STEM, LEVER HANDLE, SOLDER OR THREADED ENDS. AGA VALVES FOR GAS PIPING

PIPE HANGERS AND SUPPORTS – DESIGNED AND INSTALLED IN ACCORDANCE WITH THE UNIFORM PLUMBING CODE (UPC). INSTALLED AS PER THE MANUFACTURERS INSTRUCTIONS. PROVIDE SEISMIC SUPPORT FOR ALL PIPING SYSTEMS IN ACCORDANCE WITH IBC 2009.

FLANGES, UNIONS, AND COUPLINGS – 150 PSIG MALLEABLE IRON UNIONS FOR THREADED FERROUS PIPING; BRONZE UNIONS FOR COPPER PIPE, SOLDERED JOINTS.

ROOF PIPING SUPPORT – UV RESISTANT, FLEXIBLE, CLOSED–CELL, MEDIUM DENSITY POLYETHYLENE FOAM BLOCK WITH HOT DIPPED GALVANIZED STRUT CHANNEL. PIPE PIER AS MANUFACTURED BY ERICO OR APPROVED EQUAL.

BALL VALVES – UP TO 2 INCHES: CLASS 150, BRONZE TWO PIECE BODY, FULL PORT, FORGED BRASS, CHROME PLATED BALL, TEFLON SEATS AND STUFFING BOX RING, BLOW–OUT PROOF STEM, LEVER HANDLE, SOLDER ENDS.

SWING CHECK VALVES – CLASS 125, BRONZE SWING DISC, SOLDER OR SCREWED ENDS.

SPRING LOADED CHECK VALVES – IRON BODY, BRONZE TRIM, STAINLESS STEEL SPRING, RENEWABLE COMPOSITION DISC, SCREWED, WAFER OR FLANGED ENDS.

DIELECTRIC CONNECTIONS – IAPMO/UPC LISTED, STEEL–TO–PLASTIC DIELECTRIC WATERWAY DESIGN. THERMOPLASTIC–LINED STEEL NIPPLE WITH EXTERNAL ELECTRICAL CONTINUITY. RATED FOR CONTINUOUS USE AT TEMPERATURES UP TO 225°F AND FOR PRESSURES UP TO 300 PSI. DIELECTRIC UNIONS ARE NOT PERMITTED.
DUCTWORK – PROVIDE GALVANIZED SHEET METAL RECTANGULAR OR ROUND DUCT WHERE CALLED OUT ON THE PLANS. SEAL ALL DUCT SEAMS AND JOINTS AIRTIGHT. USE TURNING VANES IN ALL SQUARE ELBOWS. INSTALL VOLUME DAMPERS AT EACH DUCT BRANCH SERVING A DIFFUSER OR GRILLE. ALL SHEET METAL WORK TO BE CONSTRUCTED, INSTALLED, TESTED, SUPPORTED AND BALANCED IN ACCORDANCE WITH SMACNA STANDARDS. CONSTRUCT T'S, BENDS, AND ELBOWS WITH RADIUS OF NOT LESS THAN 1–½ TIMES WIDTH OF DUCT ON CENTERLINE. WHERE NOT POSSIBLE AND WHERE RECTANGULAR ELBOWS ARE USED, PROVIDE AIR FOIL TURNING VANES. WHERE ACOUSTICAL LINING IS REQUIRED, PROVIDE TURNING VANES OF PERFORATED METAL WITH GLASS FIBER INSULATION. WELD IN PLACE. TRANSFORM DUCT SIZES GRADUALLY, NOT EXCEEDING 15° DIVERGENCE AND 30° CONVERGENCE. PROVIDE STANDARD 45 DEGREE LATERAL WYE TAKEOFFS UNLESS OTHERWISE INDICATED WHERE 90 DEGREE CONICAL TEE CONNECTIONS MAY BE USED.

DUCT SOUND LINING – FLEXIBLE GLASS FIBER; ANSI/ASTM C1071; 'K' VALUE OF 0.24 AT 75 DEG F; COATED AIR SIDE FOR MAXIMUM 5,000 FT./MIN. AIR VELOCITY, UL LISTED ADHESIVE GALVANIZED STEEL PINS.

DUCTWORK INSULATION – 1" THICK FLEXIBLE INSULATION; AVERAGE THERMAL CONDUCTIVITY K EQUALS 0.24 AT 75 DEGREES F MEAN TEMPERATURE AT 1.5 PCF DENSITY. ASTM. FACTORY APPLIED VAPOR BARRIER FLAME RETARDANT FOIL–SCRIM–KRAFT (FSK) OR ALL SERVICE JACKET AND TAPE WITH PERMEABILITY RATING EQUALS 0.02 PERMS. ASTM 96. PROVIDE 1" FIBERGLASS INSULATION WITH A COMPLETE FACTORY APPLIED VAPOR BARRIER JACKET ON ALL EXHAUST DUCTWORK WITHIN 5' OF EXTERIOR OPENINGS AND MEDIUM PRESSURE SUPPLY DUCTWORK. INSULATE OUTSIDE AIR DUCTWORK WITH 2" RIGID EXTERIOR FSK DUCT WRAP AND CANVAS FINISH.

PENETRATIONS OF FIRE BARRIERS – PENETRATIONS SHALL BE PROTECTED BY AN APPROVED FIRESTOP SYSTEM INSTALLED AND TESTED IN ACCORDANCE WITH ASTM E 199 OR ASTM E 814. SYSTEMS SHALL HAVE AN F RATING NOT LESS THAN THE REQUIRED FIRE–RESISTANCE RATING OF THE ASSEMBLY BEING PENETRATED. INSTALL FIRESTOPPING IN ACCORDANCE WITH THE MANUFACTURERS RECOMMENDATIONS.

VOLUME DAMPER – FABRICATE IN ACCORDANCE WITH SMACNA HVAC DUCT CONSTRUCTION STANDARDS.

BOILER VENTING – UNIT VENTING SHALL BE UL LISTED FOR USE WITH THE APPLIANCE. VENT MATERIAL SHALL BE CPVC SCHEDULE 80 OR POLYPROPYLENE.

FIRE SPRINKLER PROTECTION – CONTRACTOR TO PROVIDE AUTOMATIC FIRE SPRINKLER SYSTEM FOR COMPLETE COVERAGE OF PROJECT AREA. FIRE PROTECTION SYSTEM SHALL BE IN COMPLIANCE WITH CONTRACT DOCUMENTS, APPLICABLE CODES AND STANDARDS, AS WELL AS THE AUTHORITY HAVING JURISDICTION AS DEFINED IN NFPA 13. PROVIDE SPRINKLER HEADS AS REQUIRED, HEADS SHALL COMPLY WITH NFPA 13 STANDARDS.

ROOF TOP UNITS – OWNER FURNISHED, CONTRACTOR INSTALLED.

ADAMS HILL CENTER
LAKE OTIS BOULEVARD

RSA Engineering, Inc.
MECHANICAL AND ELECTRICAL CONSULTING ENGINEERS
670 West Fireweed Lane, Suite 200
Anchorage, AK 99503
Phone (907) 276-0521
Fax (907) 276-1751
191 East Swanson Ave.
Wasilla, AK 99654
Phone (907) 357-1521
Fax (907) 357-1751

Gordon Thompson Architect
711 M STREET, SUITE 101 ANCHORAGE, ALASKA 99501 (907)279-2554

CORE AND SHELL - 100% DESIGN DOCUMENTS

STATE OF ALASKA
49TH
BRIAN P. PEKAR
ME-11249
08/25/15
REGISTERED PROFESSIONAL ENGINEER

DRAWN	MRB
CHECKED	BPP
DATE	25 AUG 15
JOB NO.	L5089
SHEET NO.	M0.2
OF:	

BOILER SCHEDULE

			HEATED		GROSS INPUT	GROSS	ELECTRICAL		
SYMBOL	MANUFACTURER	MODEL	MEDIUM	FUEL	MBH	OUTPUT (MBH)	FLA	POWER	REMARKS
B-1	LOCHINVAR	WHN399	WATER	NG	399	377	1.7A	120/60/1	PROVIDE W/ PH NEUTRALIZER FOR CONDENSATE DRAIN, LOW WATER CUT-OFF, REDUNDANT HIGH LIMIT, O/A TEMP SENSOR, AND SYSTEM TEMPERATURE SENSOR.

AIR SEPARATOR SCHEDULE

SYMBOL	MANUFACTURER	MODEL	SYSTEM	SIZE	CONNECTION	MATERIAL	FLUID	REMARKS
AS-1	SPIROTHERM	VJR150TM	SNOWMELT	1-1/2"	THREADED	BRASS	50% P.G.	INTEGRAL AIR AND DIRT SEPARATOR W/BLOWDOWN, 0.3 FT PRESSURE DROP, @ 25 GPM.

EXPANSION TANK SCHEDULE

						TANK VOLUME				
SYMBOL	MANUFACTURER	MODEL	FUNCTION	MEDIUM	MATERIAL	TOTAL (GAL)	ACCEPTANCE (GAL)	DIMENSIONS	LABEL	REMARKS
ET-1	AMTROL	EXTROL SX-30V	SNOW MELT	50% P.G.	STEEL/BUTYL	14	11.3	15" DIA X 25"H	IAPMO	12 PSIG PRECHARE

GLYCOL MIX TANK SCHEDULE

SYMBOL	MFGR/MODEL	FUNCTION	MEDIUM	CAPACITY	MATERIAL	DIMENSIONS	POWER	WATTS	REMARKS
GT-1	AXIOM MF300	SNOW MELT GLYCOL MAKE-UP	50% PG	17 GALLONS	POLYETHYLENE	11.75"W X 11.75"D X 36"H	120/60/1	50	CORD AND PLUG CONNECTION

PUMP SCHEDULE

							MOTOR DATA		
SYMBOL	MANFUCATURER	MODEL	FUNCTION	MEDIUM	GPM	HEAD FT.	HP	POWER	REMARKS
CP-1	GRUNDFOS	UPS 26-99 F	BOILER CIRCULATION	50% P.G.	27	5	1/6	120/60/1	FLANGED PUMP CONNECTIONS.
CP-2	GRUNDFOS	UPS 50-160 F	SNOW MELT CIRCULATION	50% P.G.	30	39	1-1/2	208/60/3	3 SPEED PUMP, SET TO SPEED 1.

SNOW MELT ZONE SCHEDULE

ZONE	MANIFOLD	DESCRIPTION	AREA (SQ. FT.)	OUTPUT REQUIRED	SUPPLY TEMPERATURE	TEMPERATURE DROP	FLOW (GPM)	PD (FT HD)	TUBING LENGTH	REMARKS
101	SMM-101	SIDEWALK	900	150 BTU/SQ. FT.	120 DEG F	30 DEG F	10.5	20	300' MAX	MANIFOLD AND TUBING PRESSURE DROP SHALL NOT EXCEED 20' HD.
102	SMM-102	SIDEWALK	1105	150 BTU/SQ. FT.	120 DEG F	30 DEG F	12.5	20	300' MAX	MANIFOLD AND TUBING PRESSURE DROP SHALL NOT EXCEED 20' HD.
103	SMM-103	SIDEWALK	470	150 BTU/SQ. FT.	120 DEG F	30 DEG F	5.5	20	300' MAX	MANIFOLD AND TUBING PRESSURE DROP SHALL NOT EXCEED 20' HD.

PLUMBING FIXTURE SCHEDULE

SYMBOL	FIXTURE	BASIS OF DESIGN	MODEL	MOUNTING	CW	HW	WASTE	VENT	TRAP	COLOR/FINISH	REMARKS
FD-1	FLOOR DRAIN	JR SMITH	2005 A	FLOOR	--	--	2"	1-1/2"	2"	--	CHROME PLATED ROUND TOP, TRAP PRIMMER CONNECTION.
FD-2	FLOOR DRAIN	JR SMITH	2005 A	FLOOR	--	--	3"	1-1/2"	3"	--	CHROME PLATED ROUND TOP, TRAP PRIMMER CONNECTION.
HB-1	HOSE BIBB	WOODFORD	B65	FLOOR	1/2"	--	--	--	--	CHROME	FREEZELESS WALL HYDRANT W/BOX AND DOOR.
RD-1	ROOF DRAIN	JR SMITH	1010	ROOF	--	--	3	--	--	--	ADJUSTABLE EXTENSION, UNDERDECK CLAMP, CAST IRON DOME.

ELECTRIC WALL UNIT HEATER

SYMBOL	MANUFACTURER	MODEL	MOUNTING HEIGHT AFF	POWER	WATTS	REMARKS
EUH-1	BRASCH	BWH1512	12"	120/60/1	1500	MOUNT IN BOILER ROOM, INTEGRAL UNIT MOUNTED T'STAT.

ROOFTOP UNIT SCHEDULE (OWNER FURNISHED, CONTRACTOR INSTALLED)

			COOLING					HEATING		VENTILATION			ELECTRICAL			
			NOMINAL	TOTAL	EDB	EWB	AMBIENT	INPUT	OUTPUT	SUPPLY	ESP	OA				
SYMBOL	MANUFACTURER	MODEL	TONS	MBH	DEG F	DEG F	DEG F	MBH	MBH	CFM	IN. WC.	%	VOLTS/PH	MCA	MOP	REMARKS
RTU-1	CARRIER	48HCTA04A2A5-0B0A0	3	38	75	62	85	82	66	1200	1.00	20	208/3	20	25	PROVIDE WITH DRY BULB ECONOMIZER, RELIEF DAMPER, THRU BASE ELEC AND GAS, CIRCUIT BREAKER, CONVENIENCE OUTLET, FILTERS, FROSTAT, CRANKCASE HEATER & 7-DAY PROGRAMMABLE THERMOSTAT
RTU-2	CARRIER	48HCTA04A2A5-0B0A0	3	38	75	62	85	82	66	1200	1.00	20	208/3	20	25	PROVIDE WITH DRY BULB ECONOMIZER, RELIEF DAMPER, THRU BASE ELEC AND GAS, CIRCUIT BREAKER, CONVENIENCE OUTLET, FILTERS, FROSTAT, CRANKCASE HEATER & 7-DAY PROGRAMMABLE THERMOSTAT
RTU-3	CARRIER	48HCTA06A2A5-0B0A0	5	64	75	63	85	120	96	1950	1.00	20	208/3	29	40	PROVIDE WITH DRY BULB ECONOMIZER, RELIEF DAMPER, THRU BASE ELEC AND GAS, CIRCUIT BREAKER, CONVENIENCE OUTLET, FILTERS, FROSTAT, CRANKCASE HEATER & 7-DAY PROGRAMMABLE THERMOSTAT
RTU-4	CARRIER	48HCTA06A2A5-0B0A0	5	64	75	63	85	120	96	1950	1.00	20	208/3	29	40	PROVIDE WITH DRY BULB ECONOMIZER, RELIEF DAMPER, THRU BASE ELEC AND GAS, CIRCUIT BREAKER, CONVENIENCE OUTLET, FILTERS, FROSTAT, CRANKCASE HEATER & 7-DAY PROGRAMMABLE THERMOSTAT
RTU-5	CARRIER	48HCTA06A2A5-0B0A0	3	38	75	62	85	82	66	1200	1.00	20	208/3	20	25	PROVIDE WITH DRY BULB ECONOMIZER, RELIEF DAMPER, THRU BASE ELEC AND GAS, CIRCUIT BREAKER, CONVENIENCE OUTLET, FILTERS, FROSTAT, CRANKCASE HEATER & 7-DAY PROGRAMMABLE THERMOSTAT
RTU-6	CARRIER	48HCTA04A2A5-0B0A0	3	38	75	62	85	82	66	1200	1.00	20	208/3	20	25	PROVIDE WITH DRY BULB ECONOMIZER, RELIEF DAMPER, THRU BASE ELEC AND GAS, CIRCUIT BREAKER, CONVENIENCE OUTLET, FILTERS, FROSTAT, CRANKCASE HEATER & 7-DAY PROGRAMMABLE THERMOSTAT
RTU-7	CARRIER	48HCTA06A2A5-0B0A0	5	64	75	63	85	120	96	1950	1.00	20	208/3	29	40	PROVIDE WITH DRY BULB ECONOMIZER, RELIEF DAMPER, THRU BASE ELEC AND GAS, CIRCUIT BREAKER, CONVENIENCE OUTLET, FILTERS, FROSTAT, CRANKCASE HEATER & 7-DAY PROGRAMMABLE THERMOSTAT

SEQUENCE OF OPERATION

RTU (TYPICAL):
CONTROLS PROVIDED WITH THE RTU SHALL INCLUDE 7-DAY PROGRAMMABLE THERMOSTAT LOCATED IN THE TENANT SPACE SERVED BY THE RTU. THERMOSTAT SHALL CONTROL AUTOMATIC SWITCH OVER FROM HEATING TO COOLING WITH ECONOMIZER. OCCUPIED MODE: OUTSIDE AIR DAMPER OPEN TO 20% MINIMUM POSITION, FAN OPERATES CONTINUOUSLY, RELIEF DAMPERS OPERATE TO MAINTAIN BUILDING STATIC PRESSURE. HEATING, COOLING AND ECONOMIZER DAMPERS OPERATE TO MAINTAIN SUPPLY AIR SETPOINT. UNOCCUPIED MODE: OUTSIDE AIR DAMPER CLOSED, FANS OFF. UNIT CHECKS TO MAINTAIN NIGHT SETBACK TEMPERATURE OF 60°F (ADJUSTABLE). PROVIDE MORNING WARM UP WITH OUTSIDE AIR DAMPER CLOSED AND SWITCH TO DAY MODE.

SNOWMELT SYSTEM (B-1), (CP-1,2):
TEKMAR CONTROLLER 664 SHALL CONTROL THE TEMPERATURE OF THE SNOWMELTING SLAB BY CYCLING B-1, CP-1, SNOWMELT CIRCULATING PUMP CP-2, AND MODULATING THE 4-WAY MIXING VALVE TO PROVIDE THE REQUIRED MIXED SUPPLY FLUID TEMPERATURE THAT SATISFIES THE LOAD WHILE PROTECTING THE SLAB FROM THERMAL STRESS. THE TEKMAR CONTROL SHALL SIGNAL THE BOILER CONTROLLER ON/OFF UPON CALL FOR HEAT. THE TEKMAR CONTROL SHALL USE A SNOW/ICE SENSOR TO AUTOMATICALLY DETECT SNOW OR ICE AND BEGIN OPERATION OF THE SYSTEM. THE SYSTEM SHALL OPERATE UNTIL THE SENSOR IS DRY OR THE CONTROL IS MANUALLY STOPPED. THE SNOWMELT SYSTEM SHALL OPERATE IN IDLE MODE UNTIL IT ENTERS WARM WEATHER SHUT DOWN. THE CONTROLS SHALL NOT OPERATE THIS SYSTEM TO PROVIDE HEAT TO THE SNOW MELTING ZONE WHEN IT ENTERS INTO A WARM WEATHER SHUT DOWN MODE. BOILER CONTROLLER SHALL OPERATE CIRCULATING PUMP AND BURNER FIRING RATES TO MAINTAIN SUPPLY TEMP SETPOINT. PROVIDE CONTROLLER AND SENSORS AS RECOMMENDED BY BOILER MANUFACTURER. SUPPLY TEMP INITIALLY SETPOINT TO BE 120°F (INITIAL SETTING, ADJUSTABLE).

EUH-1:
ELECTRIC HEATER OPERATES ON/OFF BASED ON INTEGRAL THERMOSTAT TO MAINTAIN ROOM SETPOINT, 65°F (ADJUSTABLE).

STATE OF ALASKA
BRIAN P. PEKAR
ME-11249
REGISTERED PROFESSIONAL ENGINEER

ADAMS HILL CENTER
LAKE OTIS BOULEVARD

RSA Engineering, Inc.
MECHANICAL AND ELECTRICAL CONSULTING ENGINEERS
Phone (907) 267-1321
Fax (907) 267-1322

Gordon Thompson Architect
711 M STREET, SUITE 101 ANCHORAGE, ALASKA 99501 (907)279-2554

CORE AND SHELL - 100% DESIGN DOCUMENTS

DRAWN MRB
CHECKED BPP
DATE 25 AUG 15
JOB NO. L5089
SHEET NO. M0.3
OF:

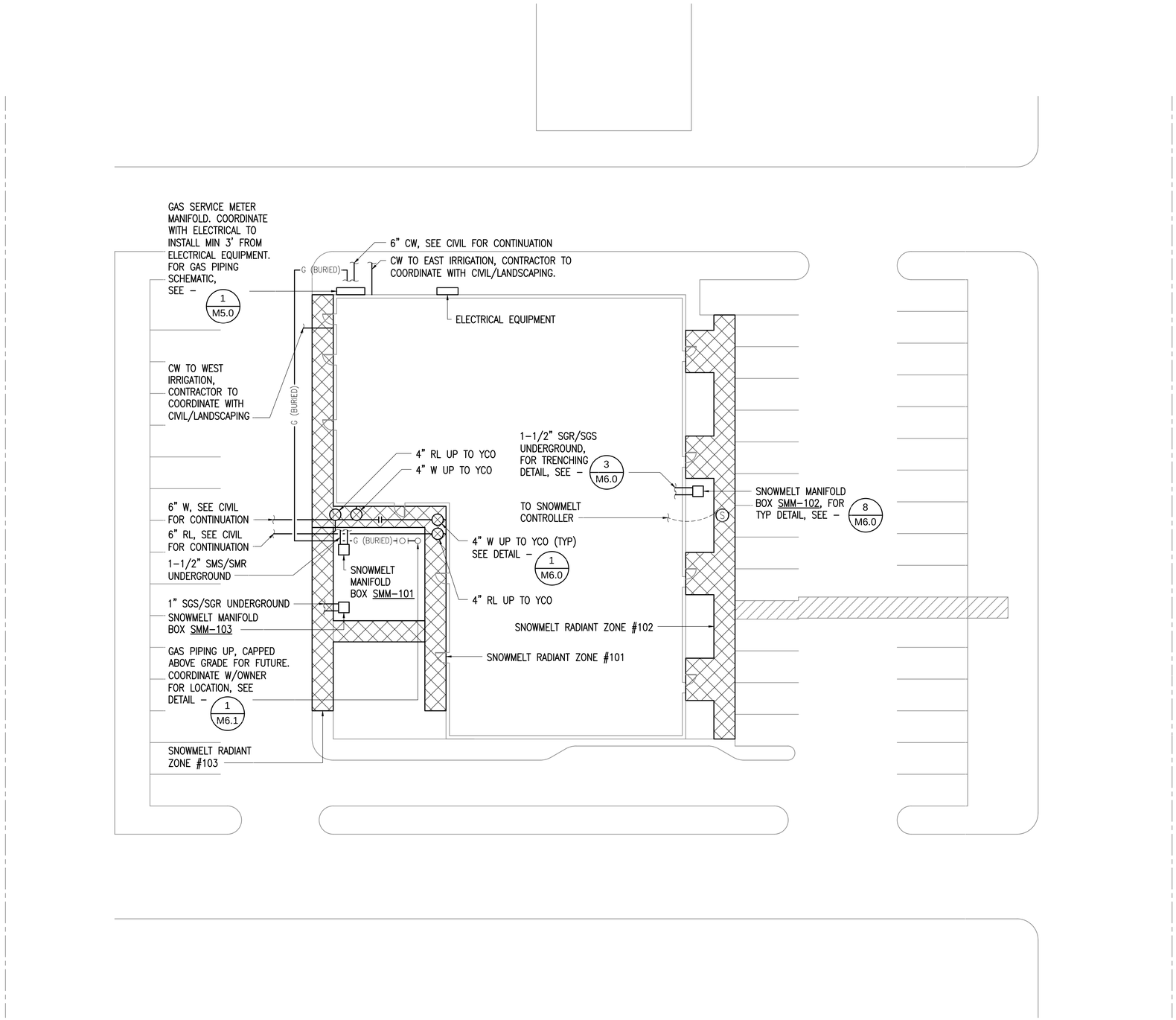

1 MECHANICAL SITE PLAN
1/16" = 1'-0"

ADAMS HILL CENTER
LAKE OTIS BOULEVARD

RSA Engineering, Inc.
MECHANICAL AND ELECTRICAL CONSULTING ENGINEERS
670 West Fireweed Lane, Suite 200 191 East Swanson Ave.
Anchorage, AK 99503 Wasilla, AK 99654
Phone (907) 276-0521 Phone (907) 357-1321
Fax (907) 276-1751 Fax (907) 357-1751

Gordon Thompson Architect
711 M STREET, SUITE 101 ANCHORAGE, ALASKA 99501 (907)279-2554

CORE AND SHELL - 100% DESIGN DOCUMENTS

STATE OF ALASKA 49TH BRIAN P. PEKAR ME-11249 REGISTERED PROFESSIONAL ENGINEER

DRAWN	MRB
CHECKED	BPP
DATE	25 AUG 15
JOB NO.	L5089
SHEET NO.	M1.0
OF:	

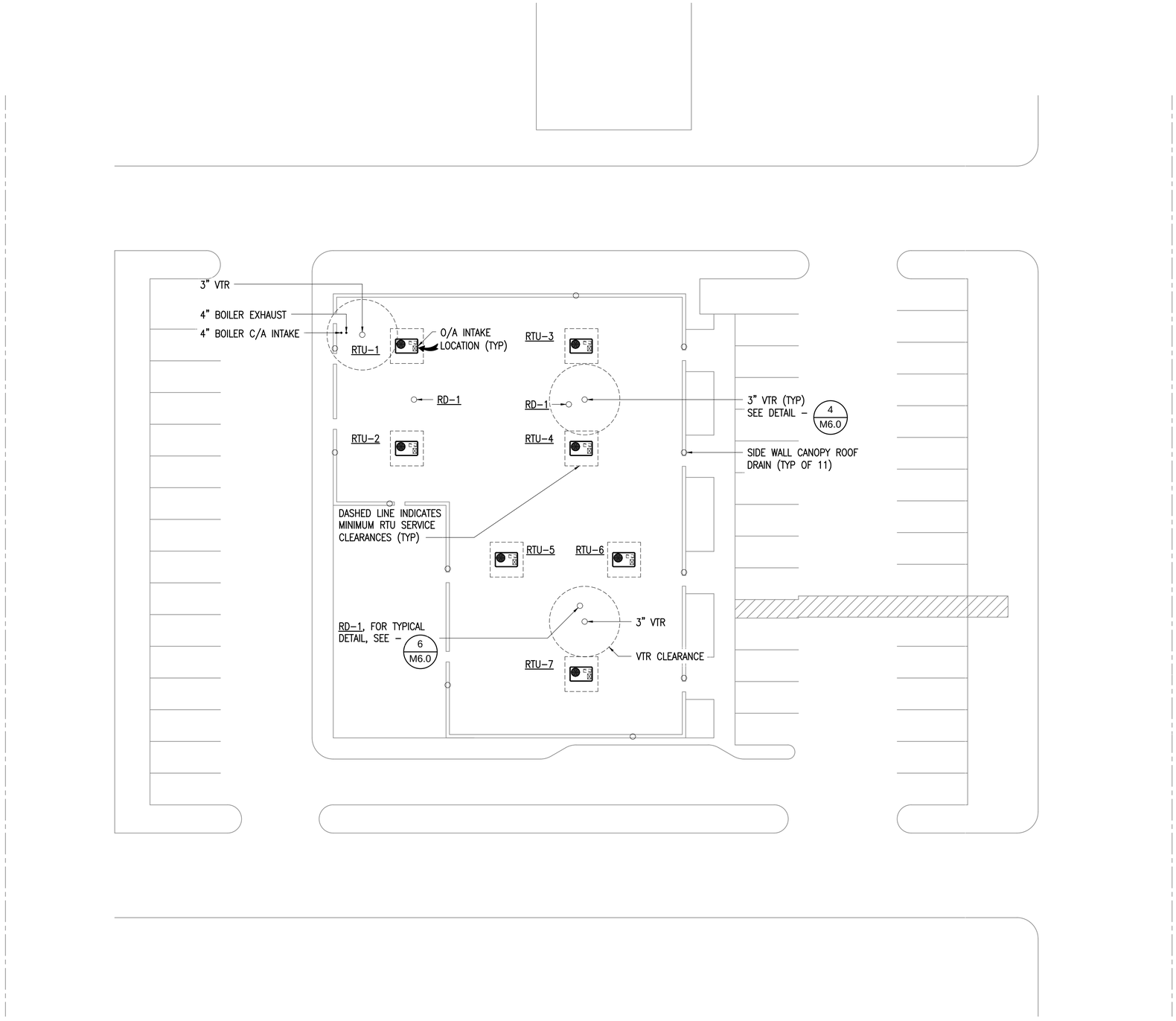

1 ROOF PLAN
1/16" = 1'-0"

ADAMS HILL CENTER
LAKE OTIS BOULEVARD

RSA Engineering, Inc.
MECHANICAL AND ELECTRICAL CONSULTING ENGINEERS
670 West Fireweed Lane, Suite 200 Anchorage, AK 99503 Phone (907) 276-0521 Fax (907) 276-1751
191 East Swanson Ave. Wasilla, AK 99654 Phone (907) 357-1321 Fax (907) 357-1751

Gordon Thompson Architect
711 M STREET, SUITE 101 ANCHORAGE, ALASKA 99501 (907)279-2554

CORE AND SHELL - 100% DESIGN DOCUMENTS

STATE OF ALASKA 49TH BRIAN P. PEKAR ME-11249 REGISTERED PROFESSIONAL ENGINEER

DRAWN	MRB
CHECKED	BPP
DATE	25 AUG 15
JOB NO.	L5089
SHEET NO.	M1.1
OF:	

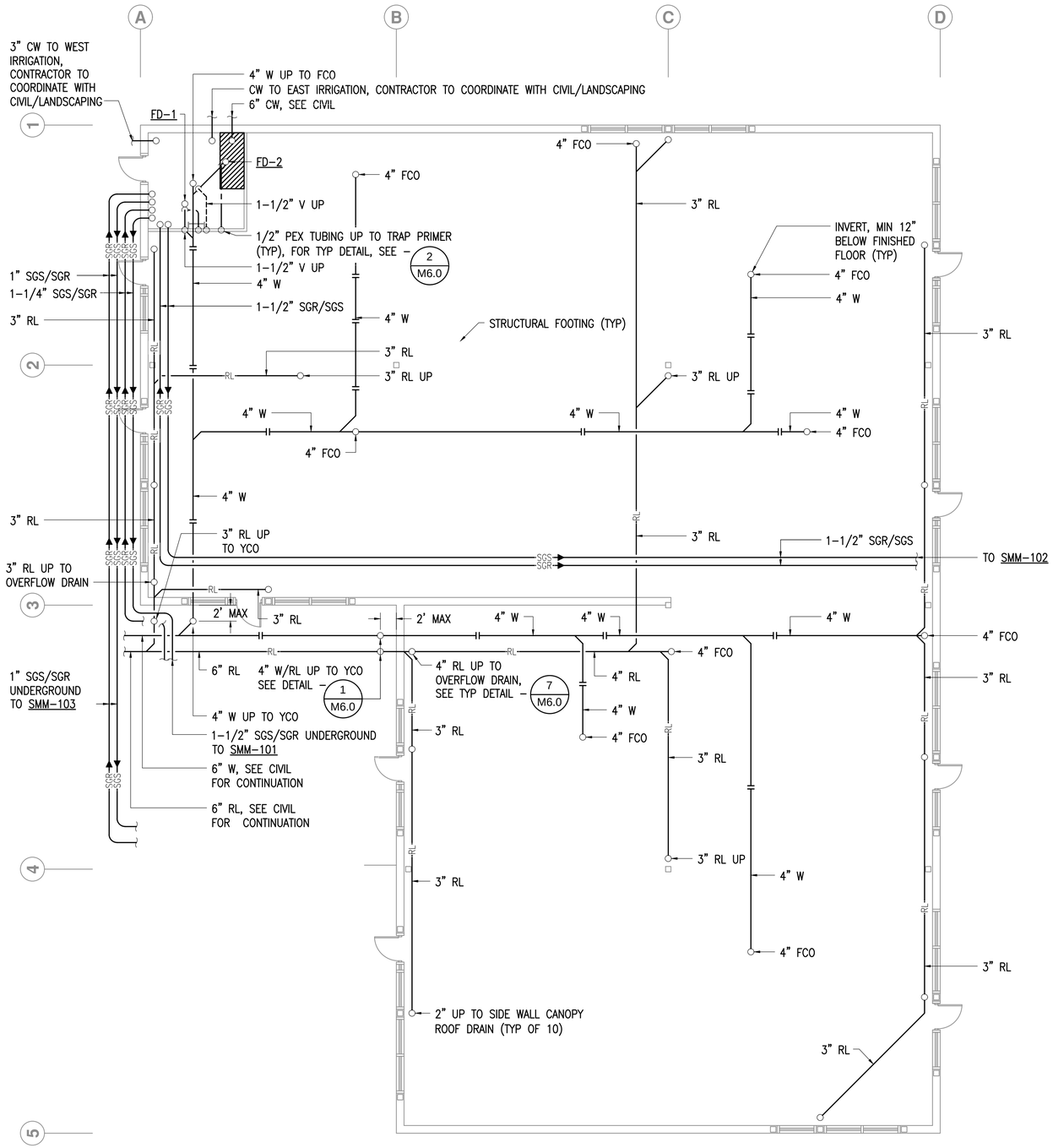

1 UNDERFLOOR PLUMBING PLAN

1/8" = 1'-0"

ADAMS HILL CENTER

LAKE OTIS BOULEVARD

RSA Engineering, Inc.
MECHANICAL AND ELECTRICAL CONSULTING ENGINEERS
2101 Vista Parkway, Suite 200 Lake Oswego, Oregon 97034
Phone (503) 274-0611 Fax (503) 274-0574
715 East Dimond Blvd. Suite A Anchorage, Alaska 99515
Phone (907) 337-3321 Fax (907) 337-3731

CORE AND SHELL - 100% DESIGN DOCUMENTS

Gordon Thompson Architect
711 M STREET, SUITE 101 ANCHORAGE, ALASKA 99501 (907)279-2554

DRAWN	MRB
CHECKED	BPP
DATE	25 AUG 15
JOB NO.	L5089
SHEET NO.	M2.0
OF:	

STATE OF ALASKA
BRIAN P. PEKAR
ME-11240
REGISTERED PROFESSIONAL ENGINEER

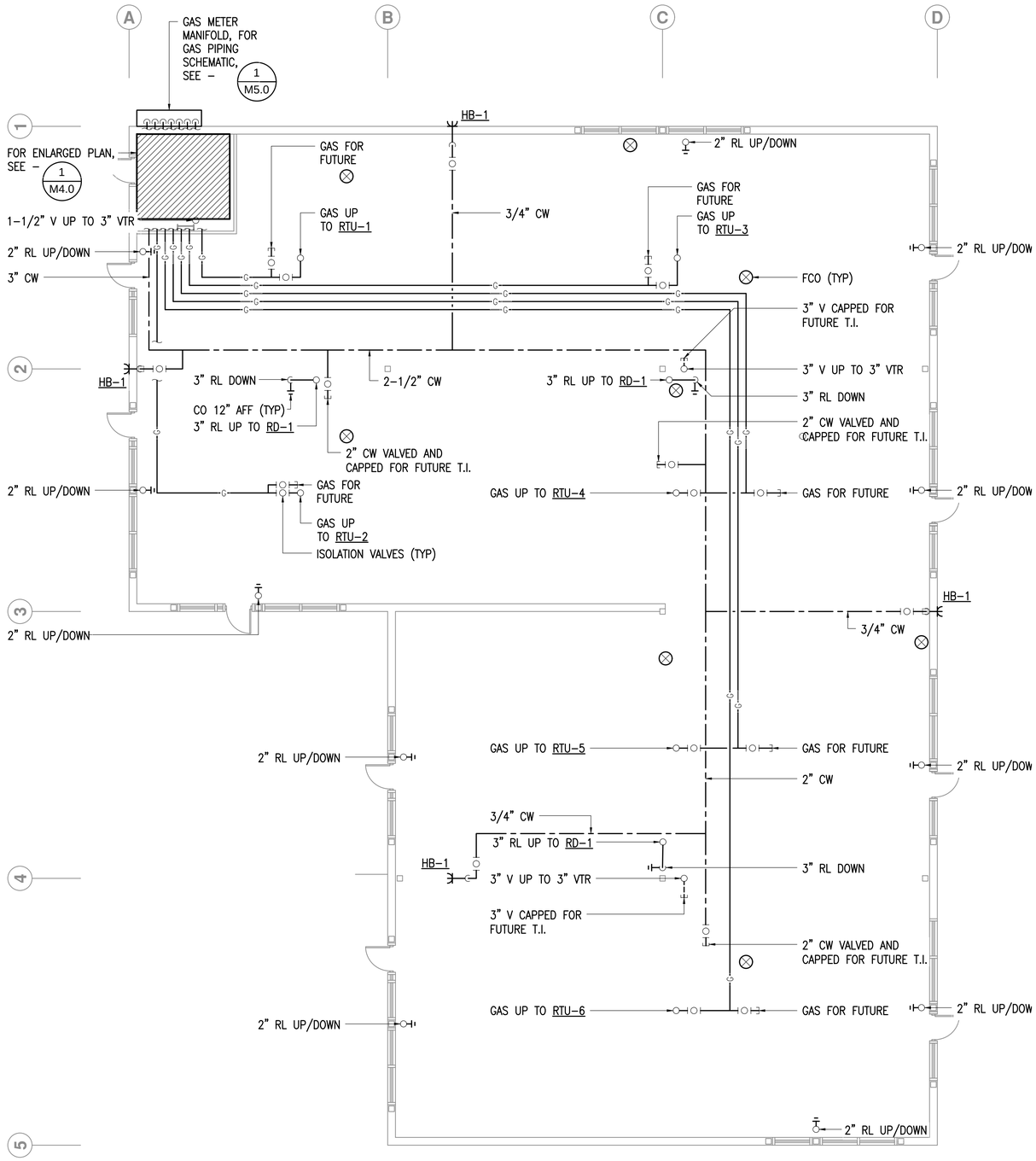

1 FIRST FLOOR PLUMBING PLAN
1/8" = 1'-0"

ADAMS HILL CENTER
LAKE OTIS BOULEVARD

RSA Engineering, Inc.
MECHANICAL AND ELECTRICAL CONSULTING ENGINEERS
670 West Fireweed Lane, Suite 200 Anchorage, AK 99503
Phone (907) 276-0521 Fax (907) 276-1751
Tel: (907) 357-1321 Website: AK 99654
Phone (907) 357-1321 Fax (907) 357-1751

Gordon Thompson Architect
711 M STREET, SUITE 101 ANCHORAGE, ALASKA 99501 (907)279-2554

CORE AND SHELL - 100% DESIGN DOCUMENTS

STATE OF ALASKA
49TH
BRIAN P. PEKAR
ME-11249
REGISTERED PROFESSIONAL ENGINEER

DRAWN	MRB
CHECKED	BPP
DATE	25 AUG 15
JOB NO.	L5089
SHEET NO.	M2.1
OF:	

1 FIRST FLOOR HVAC PLAN
1/8" = 1'-0"

GENERAL NOTES:

1. DISTRIBUTION DUCTWORK TO BE PROVIDED BY TENANT IMPROVEMENT PLANS. PROVIDE SUPPLY AND RETURN DUCTWORK DROPS FROM RTU DOWN TO SPACE AND MOUNT THERMOSTAT IN SPACE TO PROVIDE SEASONAL OPERATION OF UNITS.

ADAMS HILL CENTER
LAKE OTIS BOULEVARD

RSA Engineering, Inc.
MECHANICAL AND ELECTRICAL CONSULTING ENGINEERS
670 West Fireweed Lane, Suite 200 Anchorage, AK 99503 Phone (907) 276-0521 Fax (907) 276-1751
191 East Swanson Ave. Wasilla, AK 99654 Phone (907) 357-1321 Fax (907) 357-1751

Gordon Thompson Architect
711 M STREET, SUITE 101 ANCHORAGE, ALASKA 99501 (907)279-2554

CORE AND SHELL - 100% DESIGN DOCUMENTS

STATE OF ALASKA 49TH BRIAN P. PEKAR ME-11249 REGISTERED PROFESSIONAL ENGINEER

DRAWN	MRB
CHECKED	BPP
DATE	25 AUG 15
JOB NO.	L5089
SHEET NO.	M3.0
OF:	

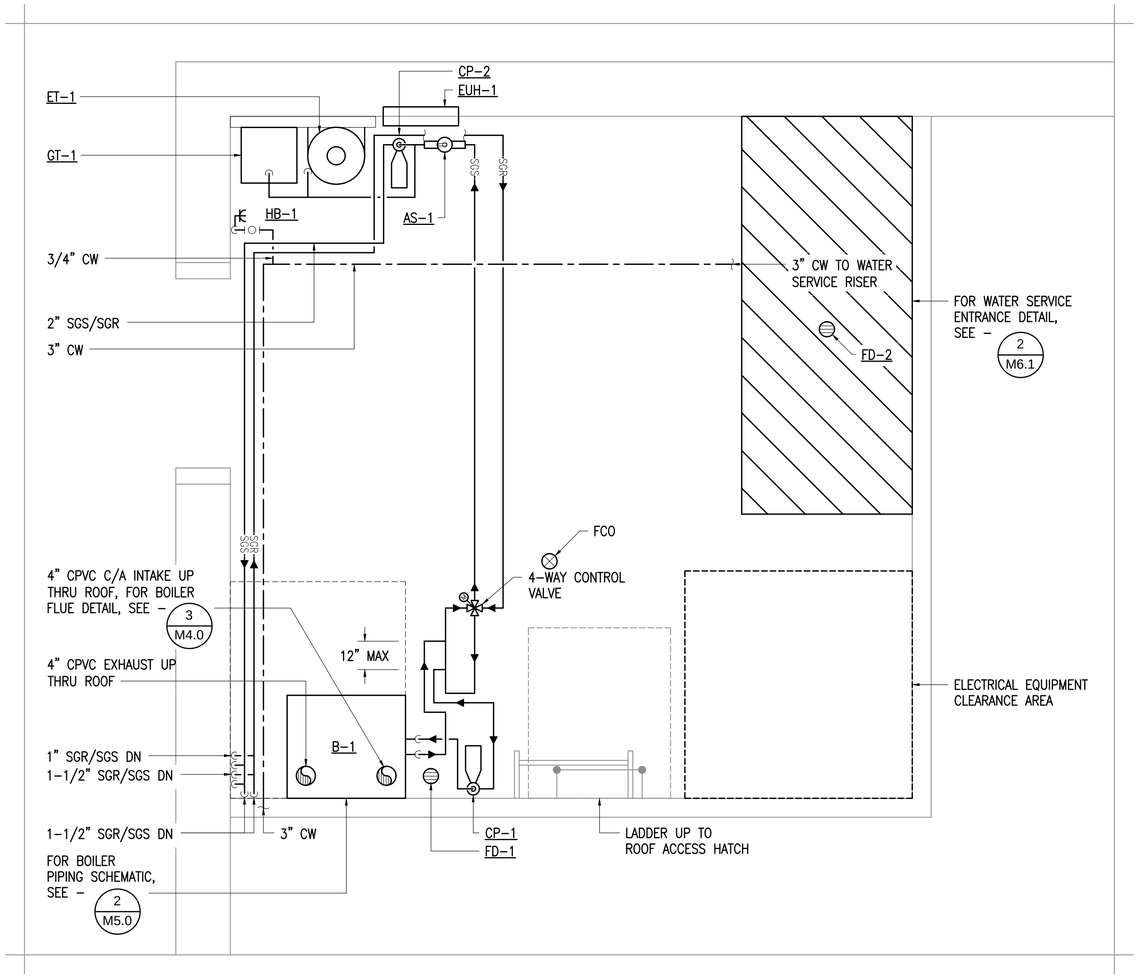

1 ENLARGED BOILER PLAN
3/4" = 1'-0"

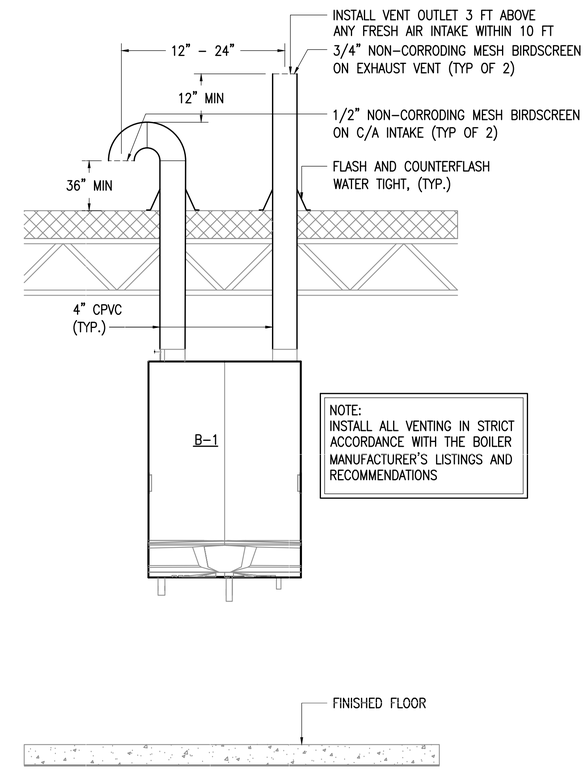

3 BOILER VENT AND C/A DETAIL
NO SCALE

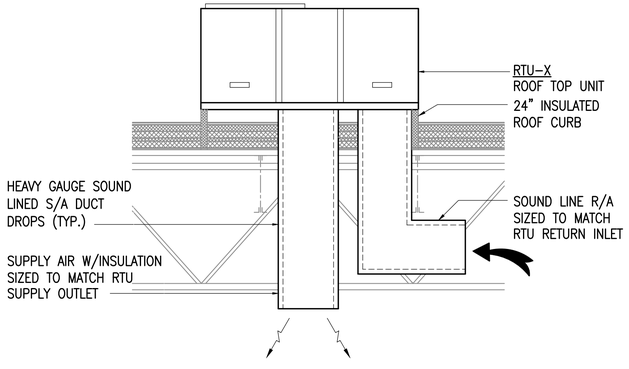

2 TYPICAL RTU SECTION
NO SCALE

ADAMS HILL CENTER
LAKE OTIS BOULEVARD

RSA Engineering, Inc.
MECHANICAL AND ELECTRICAL CONSULTING ENGINEERS
670 West Fireweed Lane, Suite 200 Anchorage, AK 99503 Phone (907) 276-0521 Fax (907) 276-1751
191 East Swanson Ave. Wasilla, AK 99654 Phone (907) 357-1321 Fax (907) 357-1751

Gordon Thompson Architect
711 M STREET, SUITE 101 ANCHORAGE, ALASKA 99501 (907)279-2554

CORE AND SHELL - 100% DESIGN DOCUMENTS

DRAWN	MRB
CHECKED	BPP
DATE	25 AUG 15
JOB NO.	L5089
SHEET NO.	M4.0
OF:	

STATE OF ALASKA 49TH BRIAN P. PEKAR ME-11249 REGISTERED PROFESSIONAL ENGINEER

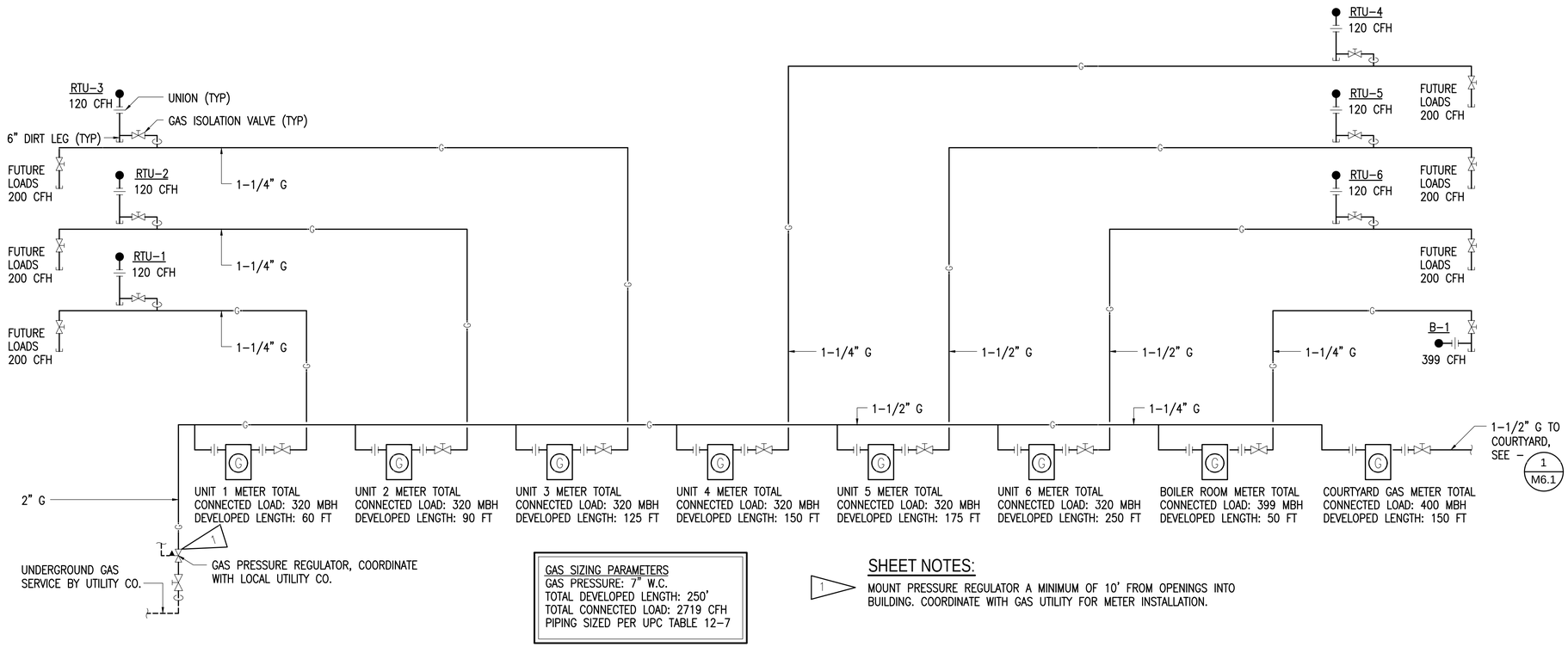

GAS SIZING PARAMETERS
GAS PRESSURE: 7" W.C.
TOTAL DEVELOPED LENGTH: 250'
TOTAL CONNECTED LOAD: 2719 CFH
PIPING SIZED PER UPC TABLE 12-7

SHEET NOTES:

1 MOUNT PRESSURE REGULATOR A MINIMUM OF 10' FROM OPENINGS INTO BUILDING. COORDINATE WITH GAS UTILITY FOR METER INSTALLATION.

1 GAS PIPING SCHEMATIC

NO SCALE

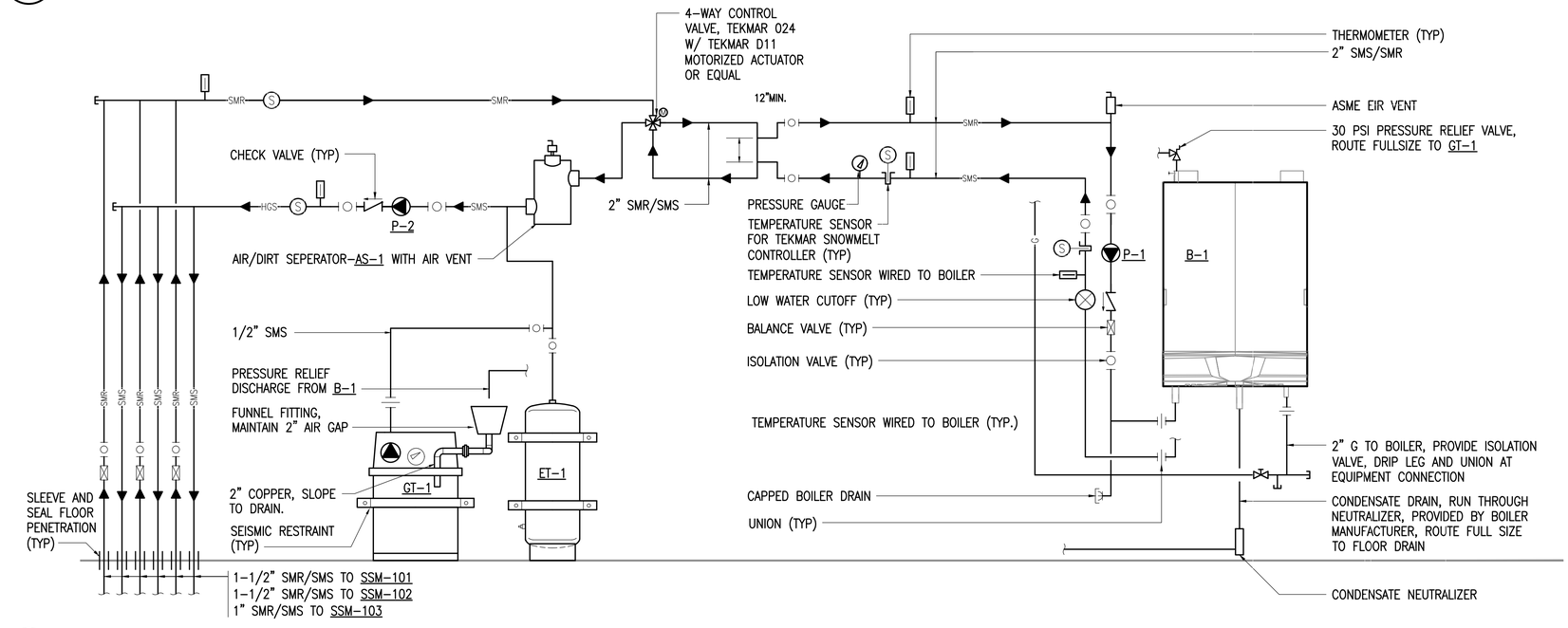

2 BOILER PIPING SCHEMATIC

NO SCALE

ADAMS HILL CENTER
LAKE OTIS BOULEVARD

RSA Engineering, Inc.
MECHANICAL AND ELECTRICAL CONSULTING ENGINEERS
670 West Fireweed Lane, Suite 200
Anchorage, AK 99503
Phone (907) 276-0521
Fax (907) 276-1751
101 East Swanson Ave.
Wasilla, AK 99654
Phone (907) 357-1321
Fax (907) 357-1751

CORE AND SHELL - 100% DESIGN DOCUMENTS

Gordon Thompson Architect
711 M STREET, SUITE 101 ANCHORAGE, ALASKA 99501 (907)279-2554

STATE OF ALASKA 49TH BRIAN P. PEKAR ME-11249 REGISTERED PROFESSIONAL ENGINEER

DRAWN	MRB
CHECKED	BPP
DATE	25 AUG 15
JOB NO.	L5089
SHEET NO.	M5.0
OF:	

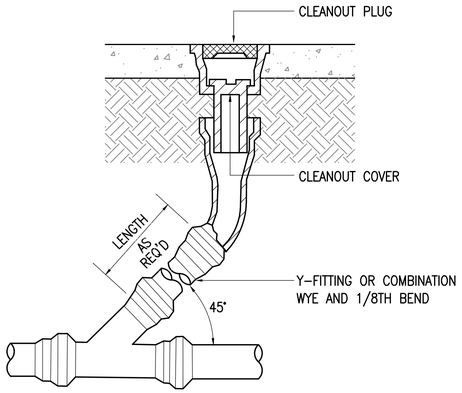

1 YARD CLEANOUT
NO SCALE

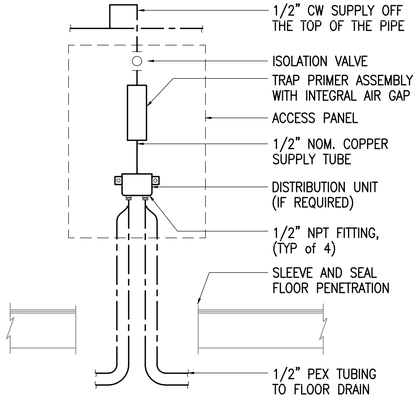

2 TRAP PRIMER DETAIL
NO SCALE

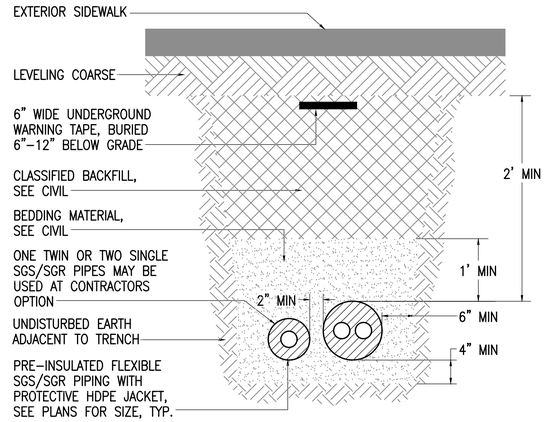

3 SNOWMELT TRENCHING DETAIL
NO SCALE

VTR TABLE	
VENT	VTR
1 1/2"	3" MIN.
2"	3"
2 1/2"	4"
3"	4"
4" & UP	SAME AS VENT

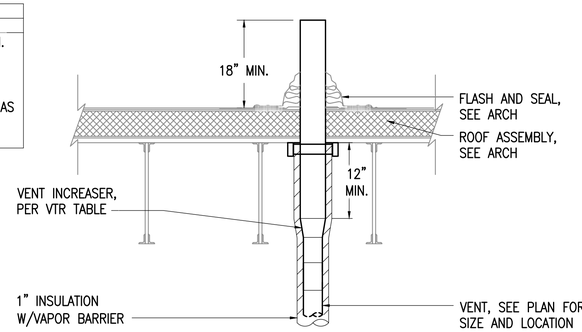

4 VENT THROUGH ROOF DETAIL
NO SCALE

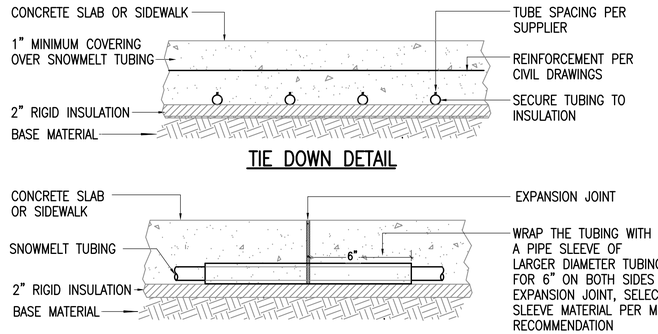

TIE DOWN DETAIL

EXPANSION JOINT DETAIL

5 SNOWMELT SLAB DETAILS
NO SCALE

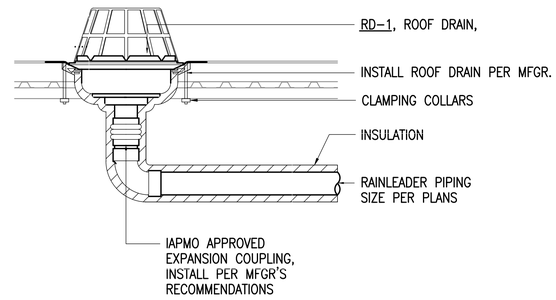

6 ROOF DRAIN DETAIL
NO SCALE

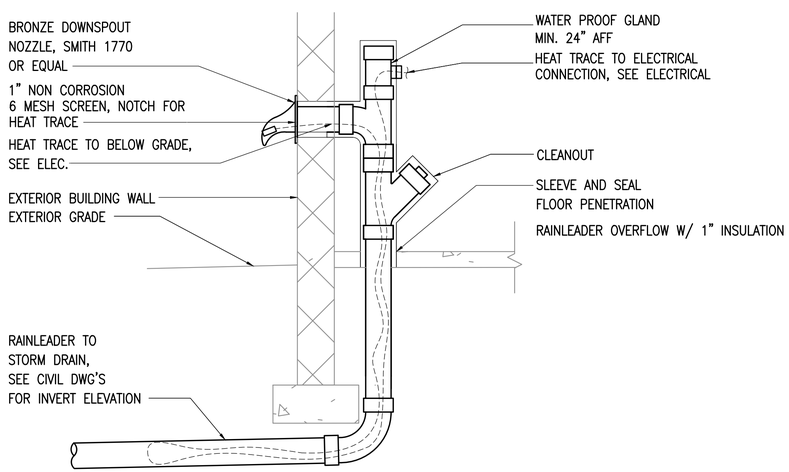

7 RAINLEADER OVERFLOW DETAIL
NO SCALE

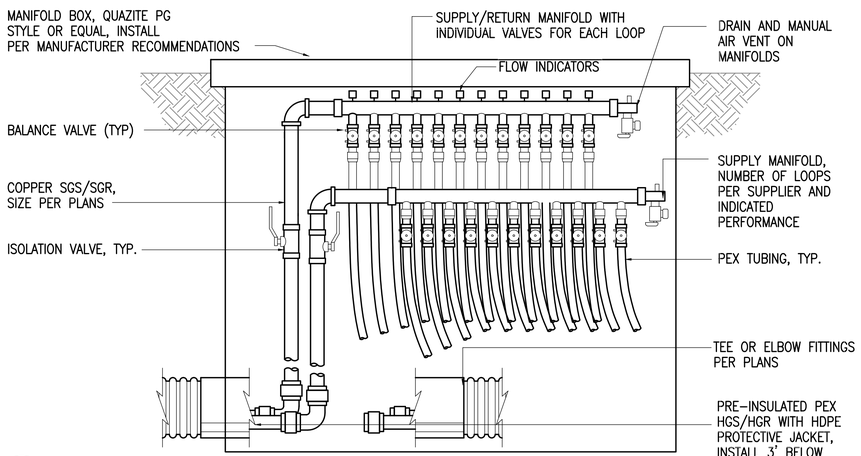

8 SNOWMELT MANIFOLD BOX DETAIL
NO SCALE

ADAMS HILL CENTER
LAKE OTIS BOULEVARD

RSA Engineering, Inc.
MECHANICAL AND ELECTRICAL CONSULTING ENGINEERS
Phone (907) 337-3321
Fax (907) 337-3126

Gordon Thompson Architect
711 M STREET, SUITE 101 ANCHORAGE, ALASKA 99501 (907)279-2554

CORE AND SHELL - 100% DESIGN DOCUMENTS

DRAWN	MRB
CHECKED	BPP
DATE	25 AUG 15
JOB NO.	L5089
SHEET NO.	M6.0
OF:	

STATE OF ALASKA
BRIAN P. PEKAR
ME–1249
REGISTERED PROFESSIONAL ENGINEER

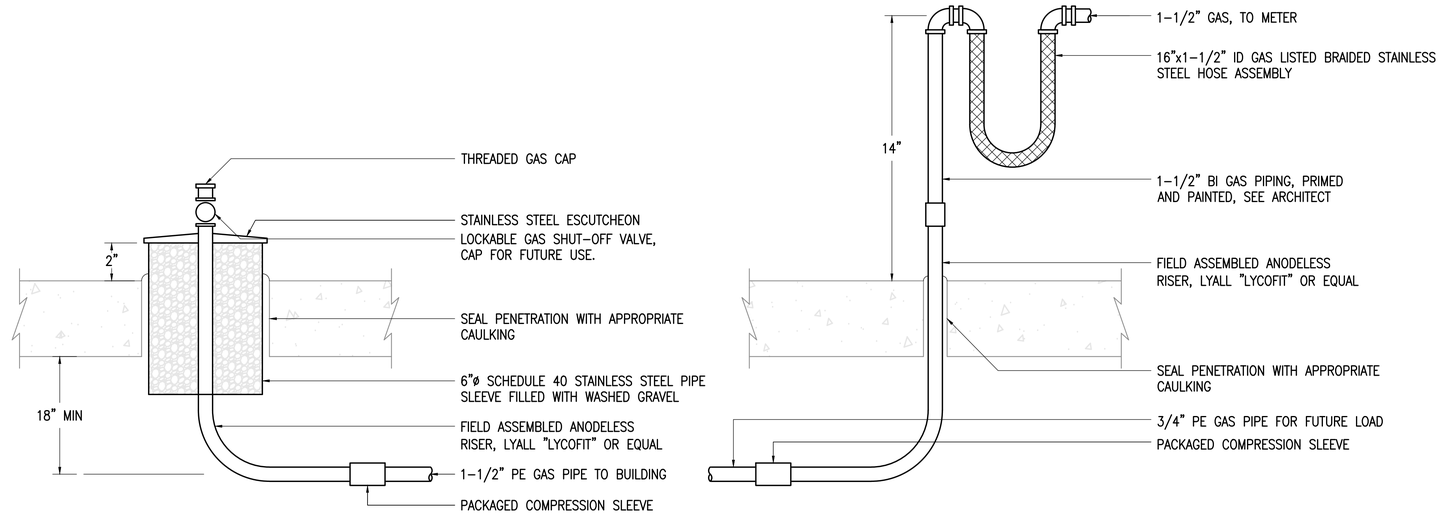

1 OUTDOOR GAS PIPING DETAIL
NO SCALE

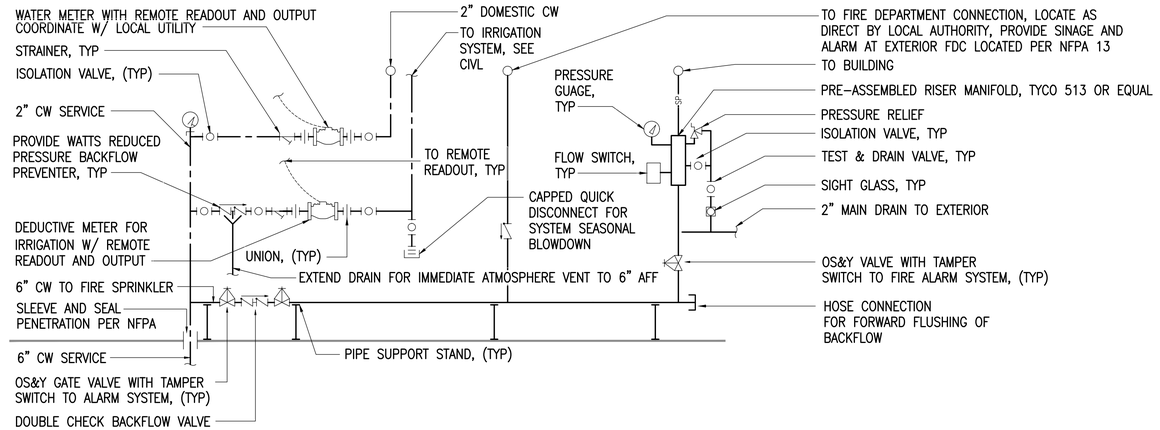

2 WATER SERVICE PIPING SCHEMATIC
NO SCALE

ADAMS HILL CENTER
LAKE OTIS BOULEVARD

RSA Engineering, Inc.
MECHANICAL AND ELECTRICAL CONSULTING ENGINEERS
670 West Fireweed Lane, Suite 200 191 East Swanson Ave.
Anchorage, AK 99503 Wasilla, AK 99654
Phone (907) 276-0521 Phone (907) 357-1321
Fax (907) 276-1751 Fax (907) 357-1751

Gordon Thompson Architect
711 M STREET, SUITE 101 ANCHORAGE, ALASKA 99501 (907)279-2554

CORE AND SHELL - 100% DESIGN DOCUMENTS

DRAWN	MRB
CHECKED	BPP
DATE	25 AUG 15
JOB NO.	L5089
SHEET NO.	M6.1
OF:	

STATE OF ALASKA 49TH BRIAN P. PEKAR ME-11249 REGISTERED PROFESSIONAL ENGINEER

LEGEND

NOT ALL SYMBOLS MAY BE USED

(E), (D)	(E) EXISTING TO REMAIN, (D) DEMOLISH
W.P.	AS SUBSCRIPT DENOTES "WEATHERPROOF"
E.	EMERGENCY LIGHT, CIRCUIT, PANEL
N.L.	NIGHT LIGHT CIRCUIT, FIXTURE
P.C.	PHOTOCELL
A	LIGHTING FIXTURE KEY-SEE SCHEDULE
100	ROOM NUMBER
1	REFER TO NOTE INDICATED
1	ELECTRICAL EQUIPMENT SCHEDULE
1	REVISION SYMBOL
	SURFACE MTD. FIXTURE:CEILING, WALL
	WALL MTD. FLUORESCENT FIXTURE
	SURFACE/PENDANT MTD. FLUORESCENT FIXTURE
	RECESSED FLUORESCENT FIXTURE
	EMERGENCY LIGHT FIXTURE
	BATTERY POWERED EMERGENCY LIGHTING UNIT, WALL AND CEILING
	ARROWS INDICATE AIMING
	EXIT SIGN, W/ARROWS AS NOTED
	AREA LIGHT
J	JUNCTION BOX
13	DUPLEX OUTLET(W/CKT #, IF SHOWN. GFCI=GROUND FAULT CIRCUIT INTERUPT)
	DOUBLE DUPLEX OUTLET
	DUPLEX CONVENIENCE OUTLET, ONE SIDE SWITCHED
	SPECIAL PURPOSE OUTLET-NEMA CONFIGURATION NOTED
	EQUIPMENT CONNECTION
	240 OR 208V OUTLET
	FLOOR OUTLET-POWER
	POWER POLE
	COMBO TELEPHONE/DATA OUTLET-WALL
	COMBO TELEPHONE/DATA OUTLET-FLOOR
	EXISTING TELEPHONE OUTLET
	EXISTING TELEPHONE OUTLET - FLOOR
S	SINGLE POLE SWITCH
S_2	DOUBLE POLE SWITCH
S_3	THREE-WAY SWITCH
S_4	FOUR-WAY SWITCH
S_D	DIMMER CONTROL
S_K	KEY OPERATED SWITCH
S_P	SWITCH W/PILOT LIGHT
S_T	THERMAL OVERLOAD SWITCH, MANUAL STARTER
S_a	SWITCH SUBSCRIPT INDICATES SWITCHING
	BRANCH CIRCUIT PANEL "P"
T	TERMINAL CABINET-SUBSCRIPT "T"=TELEPHONE, "S"=SIGNAL SYSTEM
T	TRANSFORMER
1/4	MOTOR CONNECTION W/H.P. INDICATED
T	THERMOSTAT
	ELECTRIC CLOCK
C	CLOCK OUTLET
	CIRCUIT BREAKER DISCONNECT
	MAGNETIC MOTOR STARTER
	DISCONNECT SWITCH-UNFUSED
	DISCONNECT SWITCH -FUSED
	COMBINATION MOTOR STARTER-DISCONNECT
	TELEVISION ANTENNA OUTLET
M	MICROPHONE OUTLET
	PUSH BUTTON
	BELL
	BRANCH CIRCUIT-IN WALL OR CEILING
	BRANCH CIRCUIT-IN FLOOR OR UNDERGROUND
	BRANCH CIRCUIT-EXPOSED
	LOW VOLTAGE CONDUCTOR
T	TELEPHONE
	FLEXIBLE CONDUIT
	HOME RUN TO PANEL OR CABINET
	CONDUIT-UP
	CONDUIT-DOWN
W	SURFACE METAL RACEWAY

NUMBER OF WIRES IF OTHER THAN TWO

/// •	3 HOT WIRES, 1 NEUTRAL WIRE, 1 GROUND WIRE
#8 ///	WIRE SIZE IF OTHER THAN #10 OR #12

NOTES:
1. RTU'S ARE PROVIDED WITH A BREAKER AND RECEPTACLE.
2. .VERIFY PANEL LOCATIONS WITH OWNER PRIOR TO ROUGH IN.

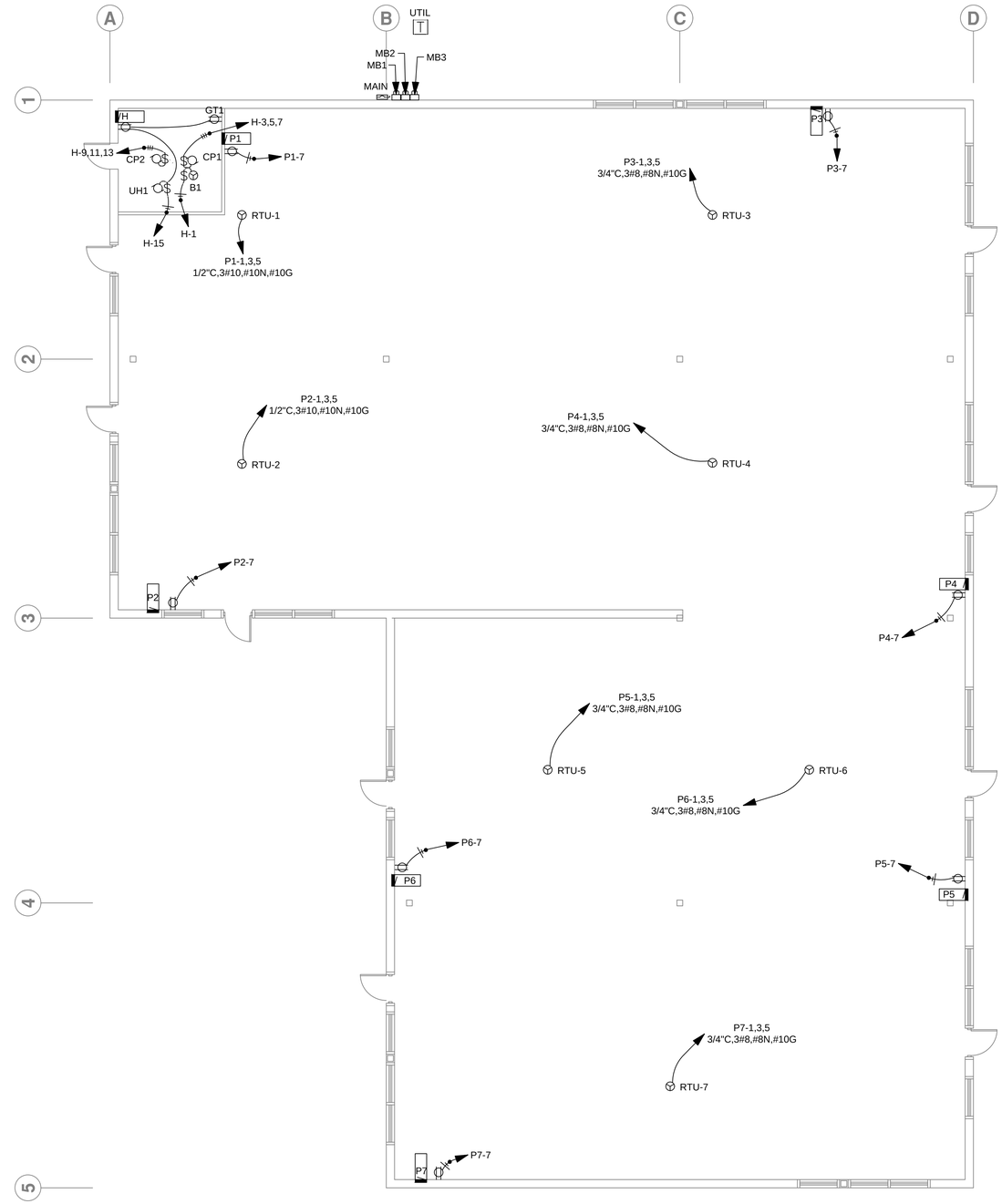

1 POWER AND COMM PLAN

SCALE: 1"=8'-0" (PRINTED ON 22" X 34" PAPER)

SCALE: 1" = 8' 0"

0 8 16

Northern Electrical Engineering Consulting, LLC

721 SESAME ST SUITE 2B
ANCHORAGE, AK 99503
PHONE (907) 562-1552
FAX (907) 562-1530
JIMPARKER@ACI.NET

STATE OF ALASKA — James H. Parker — EE 7433 — 9/1/2015 — REGISTERED PROFESSIONAL ELECTRICAL ENGINEER

DESIGN:	JSG
DRAWN:	JSG
APPROVED:	JHP
DATE:	9/1/2015

REVISIONS

NO.	DATE	BY

ADAMS HILL CENTER
LAKE OTIS BLVD

ELECTRICAL
POWER & COMMUNICATIONS

E-1

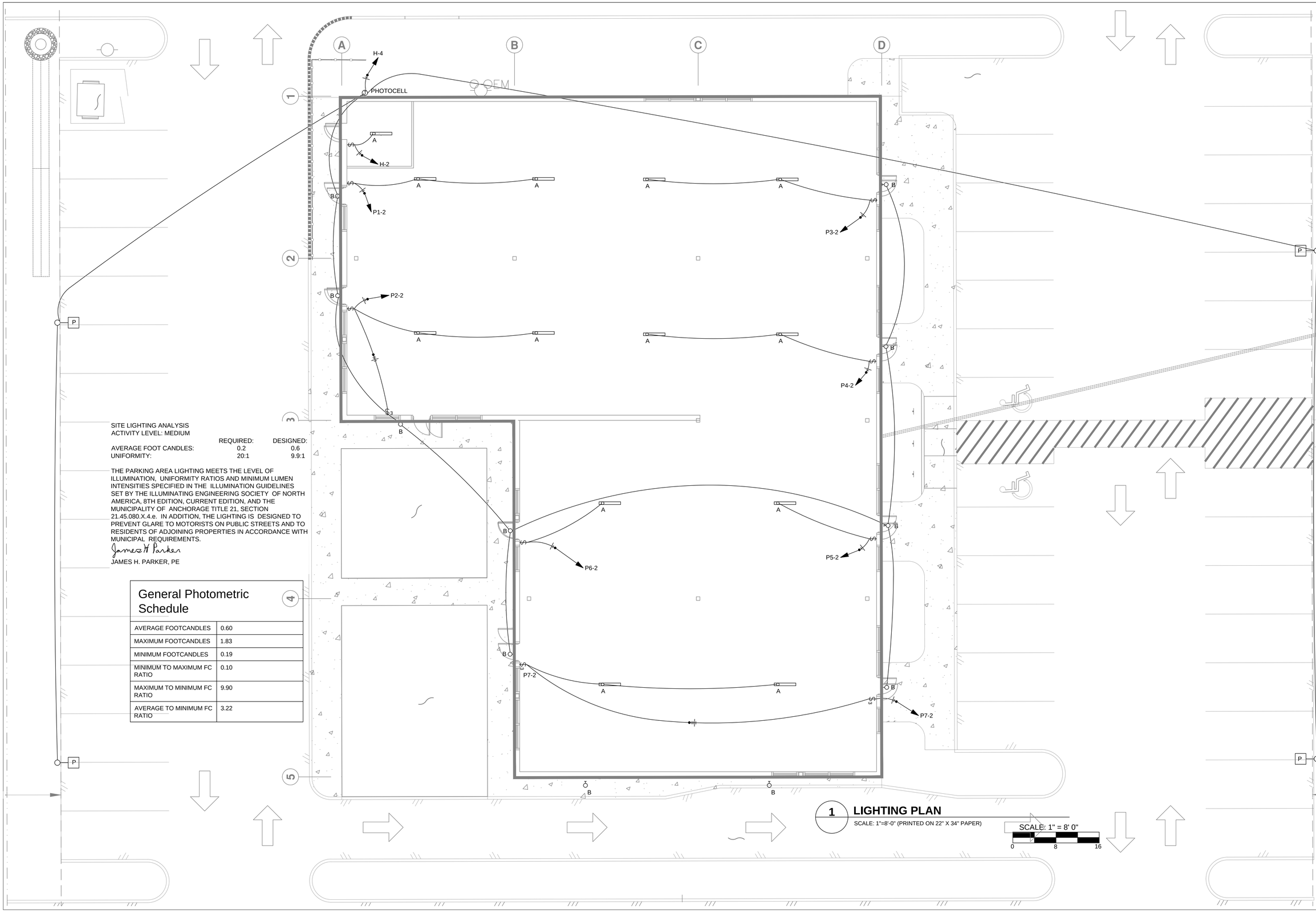

SITE LIGHTING ANALYSIS
ACTIVITY LEVEL: MEDIUM

	REQUIRED:	DESIGNED:
AVERAGE FOOT CANDLES:	0.2	0.6
UNIFORMITY:	20:1	9.9:1

THE PARKING AREA LIGHTING MEETS THE LEVEL OF ILLUMINATION, UNIFORMITY RATIOS AND MINIMUM LUMEN INTENSITIES SPECIFIED IN THE ILLUMINATION GUIDELINES SET BY THE ILLUMINATING ENGINEERING SOCIETY OF NORTH AMERICA, 8TH EDITION, CURRENT EDITION, AND THE MUNICIPALITY OF ANCHORAGE TITLE 21, SECTION 21.45.080.X.4.e. IN ADDITION, THE LIGHTING IS DESIGNED TO PREVENT GLARE TO MOTORISTS ON PUBLIC STREETS AND TO RESIDENTS OF ADJOINING PROPERTIES IN ACCORDANCE WITH MUNICIPAL REQUIREMENTS.

James H Parker

JAMES H. PARKER, PE

General Photometric Schedule

AVERAGE FOOTCANDLES	0.60
MAXIMUM FOOTCANDLES	1.83
MINIMUM FOOTCANDLES	0.19
MINIMUM TO MAXIMUM FC RATIO	0.10
MAXIMUM TO MINIMUM FC RATIO	9.90
AVERAGE TO MINIMUM FC RATIO	3.22

1 LIGHTING PLAN

SCALE: 1"=8'-0" (PRINTED ON 22" X 34" PAPER)

SCALE: 1" = 8' 0"

0 8 16

Northern Electrical Engineering Consulting, LLC

721 SESAME ST SUITE 2B
ANCHORAGE, AK 99503
PHONE (907) 562-1552
FAX (907) 562-1530
JIMPARKER@GCI.NET

STATE OF ALASKA
49th
James H. Parker
James H. Parker
EE 7433
9/1/2015
REGISTERED PROFESSIONAL ENGINEER

DESIGN:	JSG
DRAWN:	JSG
APPROVED:	JHP
DATE:	9/1/2015

REVISIONS

NO.	DATE	BY

ADAMS HILL CENTER
LAKE OTIS BLVD

ELECTRICAL
LIGHTING

E-2

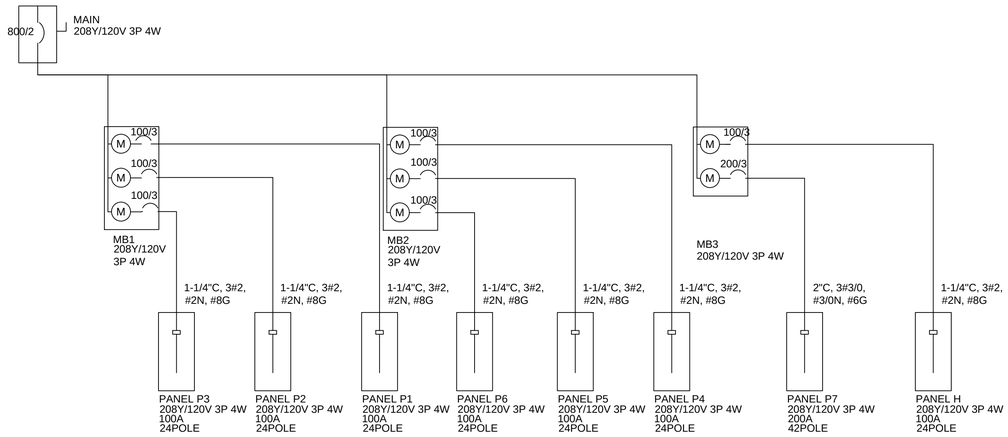

1 ONE LINE DIAGRAM

SCALE: NONE

LUMINAIRE SCHEDULE

CALLOUT	SYMBOL	LAMP	DESCRIPTION	BALLAST	MOUNTING	MODEL	INPUT WATTS	VOLTS	NOTE 1	QUANTITY
A		(1) LED, NICHIA 757 80 CRI 4000K	LED STRIPLIGHT	ELECTRONIC	CEILING	LITHONIA ZL1N L48 5000LM MVOLT 40K L/LENS 80CRI	42.5	120V 1P 2W		13
B		(1) LED	LED WALL PACK	ELECTRONIC	WALL	COOPER LIGHTING EON 303 W1	10	120V 1P 2W		11
P		(1) LED	LED PARKING LOT	ELECTRONIC	POLE	Lithonia Lighting, DSX0 LED 20C 1000 30K T3M MVOLT HS	71.41	120V 1P 2W		4
PHOTOCELL		(1)	1800W PHOTOCELL		WALL		1	120V 1P 2W		1

CONTRACTOR TO VERIFY FIXTURE COUNT

RECEPTACLE SCHEDULE

CALLOUT	SYMBOL	VOLTS	FEATURES	QUANTITY
Standard		120V 1P 2W	GND	9

CONTRACTOR TO VERIFY RECEPTACLE COUNT

SWITCH SCHEDULE

CALLOUT	SYMBOL	NOTE 1	QUANTITY
3 Way Switch	$_3$		3
Single Pole	$		7

CONTRACTOR TO VERIFY SWITCH COUNT

NOTES:

1. THE CONTRACTOR SHALL PROVIDE ALL MATERIALS AND LABOR NECESSARY FOR A COMPLETE AND OPERABLE SYSTEM.
2. THE DRAWINGS ARE PARTLY DIAGRAMMATIC, NOT NECESSARILY SHOWING EXACT LOCATIONS UNLESS SPECIFICALLY DIMENSIONED. THE CONTRACTOR SHALL BE RESPONSIBLE FOR COORDINATION WITH OTHER TRADES TO AVOID CONFLICTS IN CONGESTED AREAS.
3. CONFORM TO ALL APPLICABLE CODES, INCLUDING NFPA 70, 2014 EDITION AND LOCAL AMENDMENTS.
4. THE CONTRACTOR SHALL SECURE AND PAY FOR ALL NECESSARY PERMITS AND FEES.
5. ALL WORK PERFORMED UNDER THIS CONTRACT IS TO BE FREE FROM DEFECTS IN MATERIALS AND WORKMANSHIP FOR A PERIOD OF ONE YEAR FROM ACCEPTANCE. ANY FAULTY MATERIALS OR WORKMANSHIP SHALL BE REPAIRED OR REPLACED TO THE SATISFACTION OF THE OWNER DURING THE WARRANTY PERIOD.
6. ALL EQUIPMENT INSTALLED UNDER THIS PROJECT SHALL BE BRACED FOR A SEISMIC EVENT IN ACCORDANCE WITH THE 2009 INTERNATIONAL BUILDING CODE SECTION 1613.
7. ALL MATERIALS SHALL BE NEW AND UNUSED, INSTALLED PER MANUFACTURER'S DIRECTIONS AND IN THE BEST PRACTICE OF THE CRAFT.
8. USE RIGID STEEL CONDUIT WHERE UNDERGROUND OR SUBJECT TO DAMAGE. USE ELECTRICAL METALLIC TUBING OR AC/MC IN INTERIOR LOCATIONS.
9. PROVIDE TRENCH MARKING TAPE FOR ALL BURIED CONDUITS OR CABLES EXTENDING BEYOND BUILDING FOUNDATIONS.
10. FEEDERS AND BRANCH CIRCUITS: COPPER CONDUCTOR, 600 VOLT INSULATION, THHN/THWN FOR HEATED AREAS, XHHW FOR NONHEATED AREAS.
11. DO NOT INSTALL THERMOPLASTIC CONDUCTORS WHEN TEMPERATURE IN WORK AREA IS BELOW 20 DEGREES F.
12. GROUND THE ELECTRICAL SERVICE SYSTEM NEUTRAL AT SERVICE ENTRANCE EQUIPMENT. PROVIDE #6 TELEPHONE SYSTEM GROUNDING CONDUCTOR AT TELEPHONE PANEL. BOND TOGETHER SYSTEM NEUTRALS, SERVICE EQUIPMENT ENCLOSURES, EXPOSED NON CURRENT CARRYING METAL PARTS OF ELECTRICAL EQUIPMENT, METAL RACEWAY SYSTEMS, RECEPTACLE GROUND CONNECTORS, AND PLUMBING SYSTEMS. GROUND RODS: COPPER ENCASED STEEL, 3/4 INCH DIAMETER, LENGTH 10 FEET. PROVIDE A GROUND WIRE IN ALL CONDUITS CONTAINING LINE VOLTAGE.
13. WALL SWITCHES FOR LIGHTING CIRCUITS: NEMA WD; 1 AC GENERAL USE SNAP SWITCH WITH TOGGLE HANDLE, RATED 20 AMPERES AND 120/277 VOLTS AC. HANDLE: IVORY PLASTIC.
14. CONVENIENCE RECEPTACLE CONFIGURATION: NEMA WD 1; TYPE 5 20 R, IVORY PLASTIC FACE. GFCI RECEPTACLES: DUPLEX CONVENIENCE RECEPTACLE WITH INTEGRAL CLASS A GROUND FAULT CURRENT INTERRUPTER U.L. NO. 493 LISTED.
15. DECORATIVE COVER PLATE: IVORY SMOOTH PLASTIC.
16. ELECTRICAL BOX LOCATIONS SHOWN ON CONTRACT DRAWINGS ARE APPROXIMATE UNLESS DIMENSIONED. VERIFY LOCATION OF SWITCHES AND OUTLETS PRIOR TO ROUGH IN. UNLESS OTHERWISE NOTED, MOUNT OUTLETS AT THE FOLLOWING HEIGHTS FROM FINISHED FLOOR TO CENTER LINE OF OUTLET:
    WALL SWITCHES 3'8"
    CONVENIENCE OUTLETS NON ADA: 1'2" ADA: 1'6"
    WEATHERPROOF CONVENIENCE OUTLETS 2'6"
    TELEPHONE OUTLETS NON ADA: 1'2" ADA: 1'6"
    PUBLIC TELEPHONE OUTLET 3'8"
    SPECIAL EQUIPMENT: AS NOTED ON DRAWINGS.
17. ELECTRICAL PANEL LOCATIONS SHOWN ON CONTRACT DRAWINGS ARE APPROXIMATE UNLESS DIMENSIONED. UNLESS OTHERWISE NOTED, MOUNT PANEL SO THE CENTER OF THE HANDLE OF THE TOP BREAKER IS LESS THAN THE FOLLOWING HEIGHT FROM FINISHED FLOOR:
    NON ADA: 6'6" ADA: 4'0"
18. PROVIDE ELECTRICAL BOXES AS SHOWN ON DRAWINGS, AND AS REQUIRED FOR SPLICES, TAPS, WIRE PULLING, EQUIPMENT CONNECTIONS, AND CODE COMPLIANCE.
19. USE MULTIPLE GANG BOXES WHERE MORE THAN ONE DEVICE ARE MOUNTED TOGETHER; DO NOT USE SECTIONAL BOXES.
20. INSTALL PULLWIRE OR POLYETHYLENE PULLING STRING IN EACH EMPTY TELEPHONE CONDUIT CONTAINING A BEND OR OVER 10 FT IN LENGTH.
21. METER BASE: 7 JAWS. COMPLY WITH SERVING UTILITY REQUIREMENTS. ALL COMMERCIAL SERVICES SHALL HAVE A MANUAL CIRCUIT CLOSER.
22. BRANCH CIRCUIT PANELBOARDS: NEMA PB1; PLUG ON CIRCUIT BREAKER TYPE.
23. LABELING: PROVIDE A TYPED CIRCUIT DIRECTORY FOR EACH BRANCH CIRCUIT PANELBOARD AND SWITCHBOARD. USE A PENCIL TO LABEL SPARE CIRCUIT BREAKERS. FOR PANELBOARDS, NUMBER CIRCUITS WITH ODD NUMBERS ON THE LEFT, EVEN NUMBERS ON THE RIGHT, ONE NUMBER FOR EVERY POLE. EVERY CIRCUIT SHALL HAVE A UNIQUE DESCRIPTION THAT CLEARLY IDENTIFIES THE LOAD SERVED. PROVIDE A NAME PLATE IDENTIFYING THE PANEL NAME. EVERY SWITCHBOARD AND PANEL SHALL HAVE A NAMEPLATE IDENTIFYING THE SOURCE OF POWER THAT SUPPLIES IT. PROVIDE A LABEL ON THE SERVICE ENTRANCE EQUIPMENT WITH THE MAXIMUM AVAILABLE SHORT CIRCUIT CURRENT AND DATE.
24. FUSIBLE SWITCH ASSEMBLIES AND NONFUSIBLE SWITCH ASSEMBLIES: NEMA KS 1; TYPE HD. HANDLE LOCKABLE IN OFF POSITION WITH INTERLOCK TO PREVENT OPENING IN ON POSITION.

Northern Electrical Engineering Consulting, LLC
NEE Co
721 SESAME ST SUITE 2B
ANCHORAGE, AK 99503
PHONE (907) 562-1552
FAX (907) 562-1530
JIMPARKER@ACS.NET

STATE OF ALASKA
49th
James H. Parker
James H. Parker
EE 7433
9/1/2015
REGISTERED PROFESSIONAL ENGINEER

DESIGN: JSG
DRAWN: JSG
APPROVED: JHP
DATE: 9/1/2015

REVISIONS

NO.	DATE	BY

ADAMS HILL CENTER
LAKE OTIS BLVD

ELECTRICAL
ONELINE AND SCHEDULES

E-3

P1

ROOM
MOUNTING FLUSH
FED FROM MB1
NOTE

VOLTS 208Y/120V 3P 4W
BUS AMPS 100
NEUTRAL 100%

AIC 22,000
MAIN BKR MLO
LUGS STANDARD

CKT #	CKT BKR	CIRCUIT DESCRIPTION	KVA LOAD A	B	C	CKT #	CKT BKR	CIRCUIT DESCRIPTION	KVA LOAD A	B	C
1	25/3	RTU-1	2.4			2	20/1	LIGHTING	0.085		
3	|			2.4		4	-/1	SPACE		0	
5	|				2.4	6	-/1	SPACE			0
7	20/1	RECEPTACLE	0.18			8	-/1	SPACE	0		
9	-/1	SPACE		0		10	-/1	SPACE		0	
11	-/1	SPACE			0	12	-/1	SPACE			0
13	-/1	SPACE	0			14	-/1	SPACE	0		
15	-/1	SPACE		0		16	-/1	SPACE		0	
17	-/1	SPACE			0	18	-/1	SPACE			0
19	-/1	SPACE	0			20	-/1	SPACE	0		
21	-/1	SPACE		0		22	-/1	SPACE		0	
23	-/1	SPACE			0	24	-/1	SPACE			0
								TOTAL CONNECTED KVA BY PHASE	2.67	2.4	2.4
								TOTAL CONNECTED AMPS BY PHASE	22.2	20	20

	CONN. KVA	CALC. KVA	
LIGHTING	0.085	0.106	(125%)
LARGEST MOTOR	7.21	9.01	(125%)
OTHER MOTORS	0	0	(100%)
RECEPTACLES	0.18	0.18	(50%>10)

	CONN. KVA	CALC. KVA	
CONTINUOUS	0	0	(125%)
HEATING	0	0	(100%)
NONCONTINUOUS	0	0	(100%)
KITCHEN EQUIP	0	0	(N/A)
NONCOIN/DIVERSE	0	0	(N/A)
TOTAL KVA	7.47	9.29	

BALANCED THREE PHASE AMPS 25.8 (100% OF CALCULATED KVA)

TYPICAL P1 THRU P6

H

ROOM
MOUNTING FLUSH
FED FROM MB3
NOTE

VOLTS 208Y/120V 3P 4W
BUS AMPS 100
NEUTRAL 100%

AIC 10,000
MAIN BKR MLO
LUGS STANDARD

CKT #	CKT BKR	CIRCUIT DESCRIPTION	KVA LOAD A	B	C	CKT #	CKT BKR	CIRCUIT DESCRIPTION	KVA LOAD A	B	C
1	20/1	B1	1.18			2	20/1	MECH ROOM LIGHTING	0.043		
3	20/3	CP1		0.443		4	20/1	EXTERIOR LIGHTING		0.377	
5	|				0.443	6	-/1	SPACE			0
7	|		0.443			8	-/1	SPACE	0		
9	20/3	CP2		0.942		10	-/1	SPACE		0	
11	|				0.942	12	-/1	SPACE			0
13	|		0.942			14	-/1	SPACE	0		
15	20/1	RECEPTACLE, UH1		0.46		16	-/1	SPACE		0	
17	-/1	SPACE			0	18	-/1	SPACE			0
19	-/1	SPACE	0			20	-/1	SPACE	0		
21	-/1	SPACE		0		22	-/1	SPACE		0	
23	-/1	SPACE			0	24	-/1	SPACE			0
								TOTAL CONNECTED KVA BY PHASE	2.6	2.22	1.39
								TOTAL CONNECTED AMPS BY PHASE	21.7	18.5	11.5

	CONN. KVA	CALC. KVA	
LIGHTING	0.419	0.524	(125%)
LARGEST MOTOR	2.83	3.53	(125%)
OTHER MOTORS	2.61	2.61	(100%)
RECEPTACLES	0.36	0.36	(50%>10)

	CONN. KVA	CALC. KVA	
CONTINUOUS	0	0	(125%)
HEATING	0	0	(100%)
NONCONTINUOUS	0	0	(100%)
KITCHEN EQUIP	0	0	(N/A)
NONCOIN/DIVERSE	0	0	(N/A)
TOTAL KVA	6.21	7.02	

BALANCED THREE PHASE AMPS 19.5 (100% OF CALCULATED KVA)

P7

ROOM
MOUNTING FLUSH
FED FROM MB3
NOTE

VOLTS 208Y/120V 3P 4W
BUS AMPS 200
NEUTRAL 100%

AIC 10,000
MAIN BKR MLO
LUGS STANDARD

CKT #	CKT BKR	CIRCUIT DESCRIPTION	KVA LOAD A	B	C	CKT #	CKT BKR	CIRCUIT DESCRIPTION	KVA LOAD A	B	C
1	40/3	RTU-7	3.48			2	20/1	LIGHTING	0.085		
3	|			3.48		4	-/1	SPACE		0	
5	|				3.48	6	-/1	SPACE			0
7	20/1	RECEPTACLE	0.18			8	-/1	SPACE	0		
9	-/1	SPACE		0		10	-/1	SPACE		0	
11	-/1	SPACE			0	12	-/1	SPACE			0
13	-/1	SPACE	0			14	-/1	SPACE	0		
15	-/1	SPACE		0		16	-/1	SPACE		0	
17	-/1	SPACE			0	18	-/1	SPACE			0
19	-/1	SPACE	0			20	-/1	SPACE	0		
21	-/1	SPACE		0		22	-/1	SPACE		0	
23	-/1	SPACE			0	24	-/1	SPACE			0
25	-/1	SPACE	0			26	-/1	SPACE	0		
27	-/1	SPACE		0		28	-/1	SPACE		0	
29	-/1	SPACE			0	30	-/1	SPACE			0
31	-/1	SPACE	0			32	-/1	SPACE	0		
33	-/1	SPACE		0		34	-/1	SPACE		0	
35	-/1	SPACE			0	36	-/1	SPACE			0
37	-/1	SPACE	0			38	-/1	SPACE	0		
39	-/1	SPACE		0		40	-/1	SPACE		0	
41	-/1	SPACE			0	42	-/1	SPACE			0
								TOTAL CONNECTED KVA BY PHASE	3.75	3.48	3.48
								TOTAL CONNECTED AMPS BY PHASE	31.2	29	29

	CONN. KVA	CALC. KVA	
LIGHTING	0.085	0.106	(125%)
LARGEST MOTOR	10.4	13.1	(125%)
OTHER MOTORS	0	0	(100%)
RECEPTACLES	0.18	0.18	(50%>10)

	CONN. KVA	CALC. KVA	
CONTINUOUS	0	0	(125%)
HEATING	0	0	(100%)
NONCONTINUOUS	0	0	(100%)
KITCHEN EQUIP	0	0	(N/A)
NONCOIN/DIVERSE	0	0	(N/A)
TOTAL KVA	10.7	13.3	

BALANCED THREE PHASE AMPS 37 (100% OF CALCULATED KVA)

FAULT CURRENT SCHEDULE

DEVICE	FAULT	AIC RATING	L-N VOLTS	UTILITY FAULT	UTILITY X	UTILITY R	FED FROM DEVICE	FED FROM FAULT	FED FROM X	FED FROM R	FEEDER SIZE	FEEDER X / 1000'	FEEDER R / 1000'	FEEDER LENGTH	FEEDER X	FEEDER R	TRANSFORMER KVA	TRANSFORMER Z%	TRANSFORMER XR RATIO	TRANSFORMER FAULT AT PRIMARY	TRANSFORMER X	TRANSFORMER R	TOTAL MOTOR FAULT	DIRECTLY CONNECTED MOTOR LOAD KVA	DIRECTLY CONNECTED MOTOR LOAD FAULT	DIRECTLY CONNECTED MOTOR LOAD X	DIRECTLY CONNECTED MOTOR LOAD R
UTIL	17,371	22,000	120V	16,650	0.007067	0.001413											150	1.75	5	UTILITY	0.004942	0.0009884	721				
MAIN	16,010	22,000	120V	15,287	0.007501	0.002313	UTIL	16,650	0.007067	0.001413	(2)#4/0	0.0205	0.0425	21'-2"	0.0004	0.0009							723				
MB1	15,479	22,000	120V	14,785	0.007731	0.002472	MAIN	15,287	0.007501	0.002313	(2)#500kcmil	0.0195	0.0135	11'-9"	0.0002	0.0002							694				
P1	10,199	22,000	120V	9,866	0.009356	0.007772	MB1	14,785	0.007731	0.002472	#2	0.046	0.15	35'-4"	0.0016	0.0053							333	7.21	80	1.455	0.3638
P2	5,890	10,000	120V	5,736	0.01219	0.01701	MB1	14,785	0.007731	0.002472	#2	0.046	0.15	96'-11"	0.0045	0.0145							154	7.21	80	1.455	0.3638
P3	8,065	10,000	120V	7,809	0.01043	0.01128	MB1	14,785	0.007731	0.002472	#2	0.046	0.15	58'-9"	0.0027	0.0088							256	10.4	116	1.004	0.2509
MB2	15,432	22,000	120V	14,741	0.007752	0.002487	MAIN	15,287	0.007501	0.002313	(2)#500kcmil	0.0195	0.0135	12'-10"	0.0003	0.0002							691				
P4	4,773	10,000	120V	4,614	0.01376	0.02207	MB2	14,741	0.007752	0.002487	#2	0.046	0.15	130'-7"	0.006	0.0196							159	10.4	116	1.004	0.2509
P5	3,921	10,000	120V	3,811	0.01541	0.02746	MB2	14,741	0.007752	0.002487	#2	0.046	0.15	166'-6"	0.0077	0.025							110	7.21	80	1.455	0.3638
P6	5,651	10,000	120V	5,504	0.01247	0.01788	MB2	14,741	0.007752	0.002487	#2	0.046	0.15	102'-8"	0.0047	0.0154							147	7.21	80	1.455	0.3638
MB3	15,379	22,000	120V	14,698	0.007772	0.002501	MAIN	15,287	0.007501	0.002313	(2)#500kcmil	0.0195	0.0135	13'-10"	0.0003	0.0002							681				
H	8,941	10,000	120V	8,688	0.009945	0.009586	MB3	14,698	0.007772	0.002501	#2	0.046	0.15	47'-3"	0.0022	0.0071							253	5.43	60	1.93	0.4825
P7	6,602	10,000	120V	6,391	0.01352	0.01303	MB3	14,698	0.007772	0.002501	#3/0	0.042	0.077	136'-9"	0.0057	0.0105							211	10.4	116	1.004	0.2509

VERIFY SIZE AND LOCATION OF TRANSFORMER. VERIFY SIZE AND LENTGH OF UTILITY SECONDARIES. CONSULT ENGINEER IF THERE ARE ANY DISCREPENCIES.

Northern Electrical Engineering Consulting, LLC
721 SESAME ST SUITE 2B
ANCHORAGE, AK 99503
PHONE (907) 562-1552
FAX (907) 562-1530
JIMPARKER@ICI.NET

STATE OF ALASKA 49th
James H. Parker
James H. Parker
EE 7433
9/1/2015
REGISTERED PROFESSIONAL ENGINEER

DESIGN: JSG
DRAWN: JSG
APPROVED: JHP
DATE: 9/1/2015

REVISIONS

NO.	DATE	BY

ADAMS HILL CENTER
LAKE OTIS BLVD

ELECTRICAL
LEGEND AND SCHEDULES

E-4